RVL-R

VAV ROUND REGULATOR OF VARIABLE FLOW FOR LOW FLOW RATES

Product characteristics:
VAV variable flow regulator with a round section, operating from the flow rate of 0.45 m/s. Equipped with an actuator and Venturi tube.

Table 1. Key parameters of RVK-R regulator.

Most important parameters	
Function	**VAV**
Operating range	**0,45-5 m/s or 0,6-8 m/s (see details tab. 3)**
Material	**Zinc-galvanized steel (DX51D+Z275) or stainless steel 1.4301**
Operating pressure range	**30-1000Pa**
Air leakage class	**C3**
Control accuracy	**5% (>1m/s), 10% (<1m/s)**
Operating temperature range	**0...50°C**

Intended use

The device, within the pressure range from 30 to 1000 Pa, djusts the amount of the air flow with the declared accuracy of regulation. As a result, the regulator becomes an essential element of the permanent installation balancing through ensuring the constant volumetric air flow. Thanks to a precise measuring venturi, it is possible to obtain the air flows from 0.45 m/s. This regulator may be used for both supply and exhaust ventilation ducts, in the vertical and horizontal position.

Max. operating temperature of 50°C.

Advantages

RVL regulator is suitable mostly for structures in which the control of volumetric flow with low flow rate is most important, what often requires maintaining the low level of flow noise or sound pressure emitted to the surrounding, e.g. in hospitals, in operating rooms, in concert halls. Thanks to an accumulating element based on Venturi tube, the device enables the precise control of the volumetric air flow as low as 0.45 m/s. The regulator is available with compact / standard actuators (150 s). In accordance with PN-EN1751, it has air leakage class C3.

- The possibility of changing the set value on site through the NFC application
- Low volumetric air flow rates (from 0.45 m/s).
- Fast opening time thanks to the damper design (110 s)

Dimensions

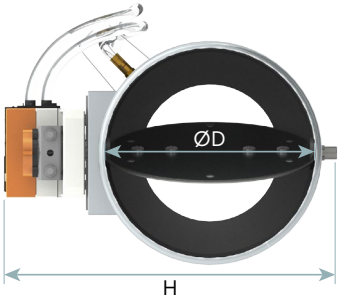

Figure 1. Dimensions of RVL-R regulator

Table 2. Key parameters.

Dimensions	Diameter ØD [mm]	L [mm]	H	Weight [kg]*
125	122	325	205	2,2
160	156	370	244	2,8
200	196	435	288	3,7
250	246	505	341	5,1

* Weight for the uninsulated version (the insulated version weight is approximately 60% higher).

Design

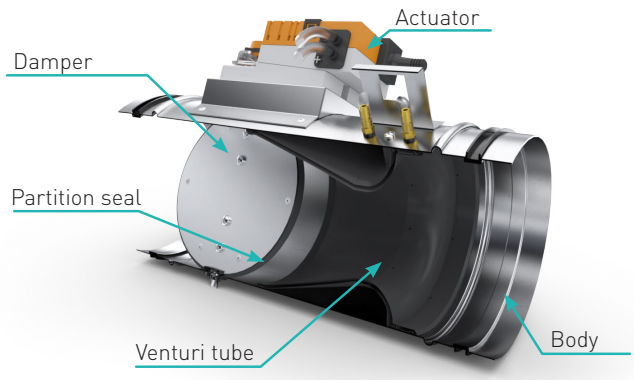

Figure 2. RVL-R design

The regulator consists of a body made of galvanized sheet or, in a special version, it is made of stainless steel (AISI 304). Venturi tube made of polypropylene is an accumulating element. The damper is made of galvanized sheet or a stainless steel sheet with a rubber seal at the edge in order to ensure the tight closure of the regulator. Air leakage class according to PN-EN1751 – C3.

SO SN

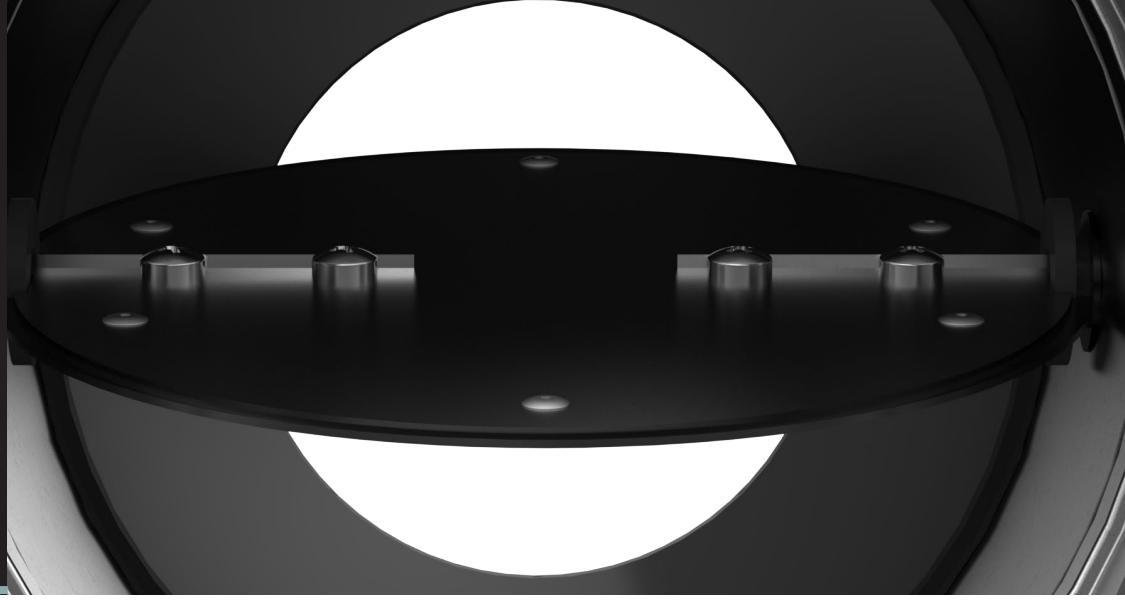

Operating range

Table 3. RVL-R regulator operating range.

RVL-R	Flow [m³/h]					
	Range I 0,45-5 m/s (A)		Range II 0,6-8 m/s (B)		Range III 1-8 m/s (C)	
	V_{min}	V_{max}	V_{min}	V_{max}	V_{min}	V_{max}
125	20	220	26	352	44	352
160	32	360	43	576	72	576
200	51	565	68	905	113	905
250	80	880	106	1408	130	1408

Range I and II - standard version automatics
Range III - special version automatics

Provided that the assembly is correct, control accuracy is:
0,45m/s-1m/s - 10%
1m/s - 8m/s 5%
(An error value is counted from the set flow value)

Mounting

RVL-R flow regulator is dedicated to mounting in both supply and exhaust ventilation ducts in vertical and horizontal.

It is possible to make a regulator with a seal at connections, ensuring secure mounting and the tightness of connection.

The regulator should be mounted according to the flow direction marked on the casing.

In order to ensure the correct operation of the device, it is necessary to adhere to the following rules:

- Straight section before the regulator in case of elbows is not required (0D),
- Straight section before the regulator in case of T-pieces is 1D,
- Straight section behind the regulator is not required..

Maintaining the maximally long straight section before the regulator in each case contributes to the improvement of control accuracy.

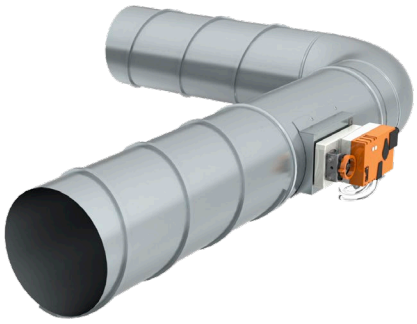

Figure 3. Mounting of RVL-R regulator

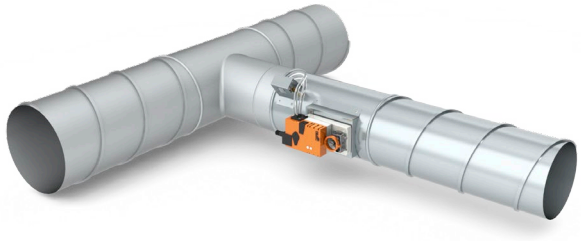

Figure 4. Mounting of RVL-R regulator

Tabela 4. Sound power level L_W [dB] and sound pressure level L_{pA} [dB(A)] emitted by RVL-R regulator.

RVL-R				dP=100Pa											dP=300Pa											dP=500Pa										
				Noise of the air flowing to the duct									through the housing		Noise of the air flowing to the duct									through the housing		Noise of the air flowing to the duct									through the housing	
DN [mm]	Flow.	Rate		in frequency bands, L_W [dB]								total	without insulation	with insulation	in frequency bands, L_W [dB]								total	without insulation	with insulation	in frequency bands, L_W [dB]								total	without insulation	with insulation
	v [m/s]	V [m³/h]	V [l/s]	63Hz	125Hz	250Hz	500Hz	1kHz	2kHz	4kHz	8kHz	L_{pA} [dB(A)]	L_{pA} [dB(A)]	L_{pA} [dB(A)]	63Hz	125Hz	250Hz	500Hz	1kHz	2kHz	4kHz	8kHz	L_{pA} [dB(A)]	L_{pA} [dB(A)]	L_{pA} [dB(A)]	63Hz	125Hz	250Hz	500Hz	1kHz	2kHz	4kHz	8kHz	L_{pA} [dB(A)]	L_{pA} [dB(A)]	L_{pA} [dB(A)]
125	0,45	20	6	36	33	41	38	38	38	30	23	35	<20	<20	42	43	51	45	45	49	44	40	45	29	<20	45	48	56	48	49	54	51	47	51	35	22
	1	44	12	38	35	42	39	39	39	31	24	36	20	<20	44	45	52	46	47	50	45	41	46	31	21	46	50	57	49	50	55	51	49	52	37	26
	2	88	25	40	36	43	39	40	40	32	26	37	21	<20	45	46	53	47	47	51	46	43	47	32	21	48	50	58	50	51	56	53	51	52	37	26
	4	177	49	42	37	45	41	42	42	34	27	39	22	<20	48	47	55	48	49	53	48	44	49	34	22	51	51	60	51	53	58	55	52	54	39	27
	6	265	74	45	38	46	42	45	45	36	29	42	25	<20	52	48	57	49	52	56	50	46	52	35	22	55	53	62	52	56	61	56	54	57	41	28
	8	353	98	46	41	47	44	47	49	40	31	44	27	<20	53	51	58	51	55	57	52	47	54	38	24	56	55	63	54	58	62	58	55	58	43	29
160	0,45	33	9	37	37	42	41	39	39	31	25	37	<20	<20	44	44	52	48	48	50	45	42	47	31	<20	47	48	56	52	52	55	52	49	52	37	23
	1	72	20	39	40	44	42	41	40	32	26	38	21	<20	46	47	53	50	49	51	46	43	48	34	22	49	51	58	53	53	56	52	50	53	39	28
	2	145	40	40	41	45	43	41	41	33	27	39	22	<20	47	48	54	50	50	52	47	44	49	34	22	51	51	58	54	54	57	54	52	54	40	28
	4	289	80	43	42	48	44	43	43	35	29	41	24	<20	50	49	57	51	52	54	49	45	51	36	23	53	53	61	55	56	60	56	53	56	42	29
	6	434	121	45	43	48	45	46	46	37	30	43	27	<20	52	52	58	52	55	57	51	47	53	37	24	55	56	63	55	59	62	58	55	58	43	29
	8	579	161	47	45	49	47	49	49	41	32	46	29	<20	53	54	59	54	56	58	54	48	54	40	25	56	59	64	57	59	62	59	56	59	45	30
200	0,45	51	14	38	40	43	42	43	40	32	26	39	26	<20	45	48	52	49	50	51	46	42	48	38	22	48	52	57	53	53	56	53	50	53	43	28
	1	113	31	40	44	45	43	44	41	32	28	40	28	<20	47	52	54	51	51	52	47	44	49	40	26	50	55	58	55	55	57	53	51	54	45	32
	2	226	63	42	45	46	44	45	42	34	29	41	29	<20	48	53	55	52	52	53	48	45	50	40	26	52	56	59	55	55	58	55	53	55	46	32
	4	452	126	44	46	49	45	46	44	36	31	42	31	<20	51	54	58	53	53	55	50	47	52	42	27	54	57	62	57	57	61	57	54	57	47	33
	6	678	188	46	48	49	49	49	47	39	32	45	34	<20	53	56	59	54	56	58	52	48	54	44	27	56	59	63	57	59	63	58	56	59	49	33
	8	904	251	49	52	52	47	52	51	43	35	48	36	<20	54	59	60	54	57	59	54	49	56	46	27	57	63	64	57	60	63	60	56	60	50	32
250	0,45	79	22	40	43	44	44	45	44	33	29	41	28	<20	45	50	54	51	52	54	48	45	50	40	23	48	54	58	54	56	59	55	52	55	45	29
	1	177	49	42	46	46	45	46	44	34	30	42	30	<20	47	53	55	52	53	55	48	46	51	41	27	50	57	60	55	57	60	55	53	56	47	33
	2	353	98	43	47	47	46	46	45	35	31	43	31	<20	49	55	56	52	54	55	49	47	52	42	27	52	58	60	56	57	60	56	55	57	47	33
	4	707	196	46	48	49	48	47	46	36	32	44	33	<20	52	55	59	54	55	57	51	48	53	43	29	54	59	63	57	59	62	58	55	58	49	34
	6	1060	294	47	52	51	51	51	49	41	33	47	36	<20	53	57	60	55	57	59	53	49	55	46	28	56	60	64	57	60	64	59	56	60	51	34
	8	1413	393	50	56	54	54	53	52	43	36	50	38	<20	55	61	61	58	58	60	55	50	57	48	29	58	64	65	60	60	64	60	56	60	53	34

Sound pressure level takes into account the attenuation of the room and ceiling for a model room accepted at the level of 8 dB. The actual parameters may differ depending on the conditions.

Acoustic data for other pressure and air flow values, including sound power level in respective frequency bands, are available in the design department of SMAY.

Control-drive system

The devices have the possibility of infinitely variable and stroke controlling - enforced.

Infinitely variable controlling - 2-10V (default) or 0-10V (K=K1). Changing the set flow value takes places in the infinitely variable and proportional manner between Vmin (2V or 0V) and Vmax (10V).

Sterowanie skokowe:

- **„Close"** – the damper shutter is in the completely closed
- position (only for communication 2-10 V).
- **„Open"** - the damper shutter is in the completely opened
- position (Belimo – required 1N4007 diode).
- $\mathbf{V_{min}}$ – minimum volumetric flow (default value).
- $\mathbf{V_{mid}}$ – medium value of volumetric flow between V_{min} and V_{max} (applies only to Belimo devices).
- $\mathbf{V_{max}}$ – maximum volumetric flow.
- $\mathbf{V_{nom}}$ – flow stream in the calibration process (most frequently 1,3 V_{max}).

Regulators are manufactured in two performance variants:

A) Standard version – RVL-R standard version (with the running time of the damper equalling 150 seconds) for clean air control:

VAV – Compact

Available actuators:

- LMV-D3-... -made by Belimo,
- GDB 181.1 ... -made by Siemens,

Controlling by means of communication protocols:

- MOD-BUS,
- EIB Konnex (KNX),
- BACnet,
- MP-BUS (Belimo only).

B) Special performance - fast RVL-R version (with the running time of the damper equalling 3 or 150 seconds) for the control of clean air or polluted air, also for slightly aggressive environment (according to the Corrosive Environments Classification ISO 12944 max. class C3):

The control-drive system of BELIMO pressure regulator consisting of a digital PID VAV regulator (VRU- M1-BAC) with the integrated static sensor of differential pressure.

Controlling by means of communication protocols:

- BACnet
- Modbus
- MP-Bus
- KNX, by means of UK24EIB gate.

Table 5. The technical data of actuators.

The technical data of actuators							
Technical data		Standard Belimo	MP-Bus	BACnet/Modbus	Standard Siemens	Performance for C3 corrosiveness class	Fast performance
		LMV-D3-MF.1 SMY	LMV-D3-MP	LMV-D3-MOD	GDB 181.1E	NM24A-VST	LMQ24A-VST
Nominal voltage		24VAC/DC, 50/60 Hz	24V AC/DC, 50/60 Hz	24V AC/DC, 50/60 Hz	24VAC 50/60 Hz	24V z reg. VRU	24V z reg. VRU
Power consumption	Operation	2 [W]	2 [W]	2[W]	2,5 [W]	2 [W]	13 [W]
	At standstill	1 [W]	1 [W]	1 [W]	0,5 [W]	0,4 [W]	2 [W]
	Nominal power	3,5 [VA]	4 [VA]	4 [VA]	3 [VA]	4 [VA]	23 [VA]
Torque		5 [Nm]	5 [Nm]	5 [Nm]	5 [Nm]	10 [Nm]	4 [Nm]
Running time from 0 to 100%		150s.	150s.	150s.	150s.	120s.	2,5s.
Connection diagram		Diagram 1	Diagram 1	Diagram 1	Diagram 2	Diagram 3	Diagram 3

More technical data are provided in the catalogue sheets of respective actuators or in the complete catalogue sheet.

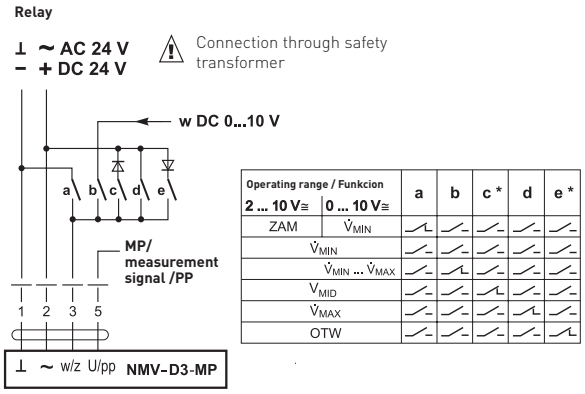

Diagram 1. A diagram of connecting the regulator with the compact actuator NMV-D3-MP or LMV-D3-MP

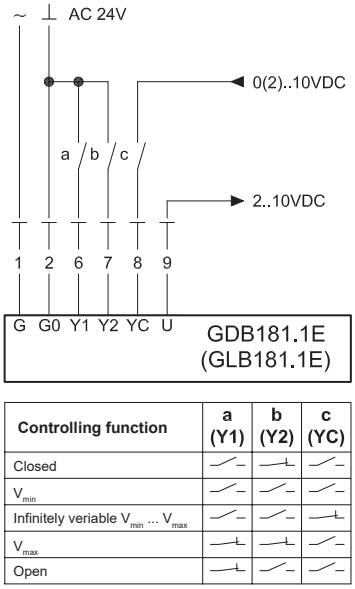

Controlling function	a (Y1)	b (Y2)	c (YC)
Closed	⁄–	—⊥	⁄–
V_{min}	⁄–	⁄–	⁄–
Infinitely veriable V_{min} ... V_{max}	⁄–	⁄–	—⊥
V_{max}	—⊥	—⊥	⁄–
Open	—⊥	⁄–	⁄–

Diagram 2. A diagram of connecting the regulator with the compact ctuator GDB 181.1 or GLB181.1

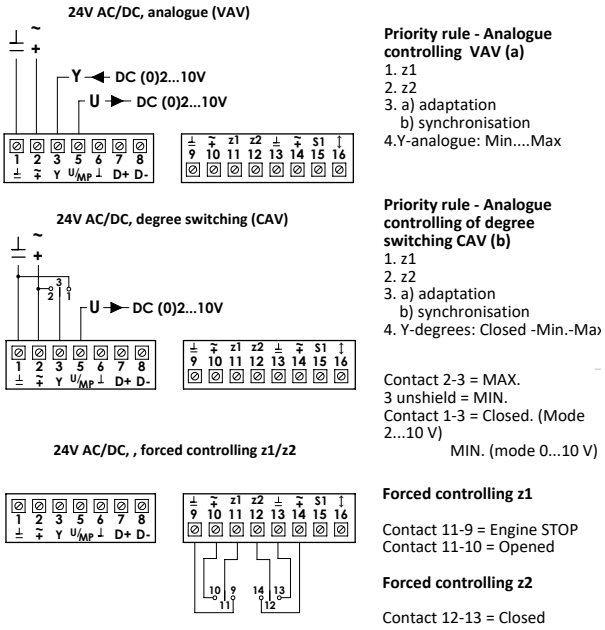

Diagram 3. The diagram of connecting with fast automatics (VRU)

Power supply must be connected through the safety transformer!
- In order to enable the performance of diagnostic and service works by means of PC-Tool software, wires 1, 2 (24V AC/DC) and 5 (signal U5) must be supplied to accessible terminal blocks (switching station, control cabinet, etc.)

RVL-R – Round regulators of variable flow for low flow rates

When placing an order, provide information according to the below pattern:

RVL-R<I>-<D>-<V_{max}>/<Za><V_{min}>-<Ta>-<Ts>-<Tp>-<K>-<N>-<S>-<P>-<Kd>-<G>

Where:

I	insulation*	
	none	**- non-insulated**
	t	- insulated
D	Diameter [mm]	
V_{MAX}	Max. volumetric flow [m³/h]	
Za	The complete closing function of the regulator *	
	none	**- no**
	(0)	- yes
V_{MIN}	Min. volumetric flow [m³/h]	
	Additional marking of the selected range of	
	A	- range I 0,45-5 m/s
	B	- range II 0,6-8 m/s
	C	- range III 1-8 m/s
Ta	Automatics type*	
	S	**- Siemens (recommended by the manufacturer)**
	B	- Belimo
Ts	Drive type*	
	none	**- standard**
	Q	- fast (Belimo only)
Tp	Connection type*	
	none	**- classic**
	MST	- communication Master/Slave function Master
	SLV	- communication Master/Slave function Slave
K	communication*	
	none	**- 2...10[V] (with an option of forcing the CLOSE position)**
	K1	- 0...10[V]
	MP BUS	- total value MP BUS
	MOD	- Modbus
	KNX	- KNX
	BAC	- BACnet revision 12
N	system regulator number (only for communication MP BUS or Modbus)	
	from 1 to 8	- the range of numbers for MP BUS communication
	from 1 to 32	- the range of numbers for Modbus communication
	from 1 to 30**	- the range of numbers for Modbus communication in the iFlow system (** number without multiples of 3 e.g.: 1, 2, 4, 5, 7, 8, 10... etc.)
S	environment*	
	none	**- clean air**
	C3	- environment with max. C3 class
P	material*	
	none	**- galvanized steel**
	SN	- stainless steel
Kd	additional communication (only Belimo [none, K1, MP])	
	none	**- standard**
	NFC	- communication via NFC

G	seal at the connection*	
	none	**- with no seal**
	UP	- seal at the connections

*Optional values - if they are missing, default values are applied

Exemplary product marking method:
RVL-Rt-125-130/85-SN-UP