KWP-L

Fire Damper – rectangular

Technical Documentation

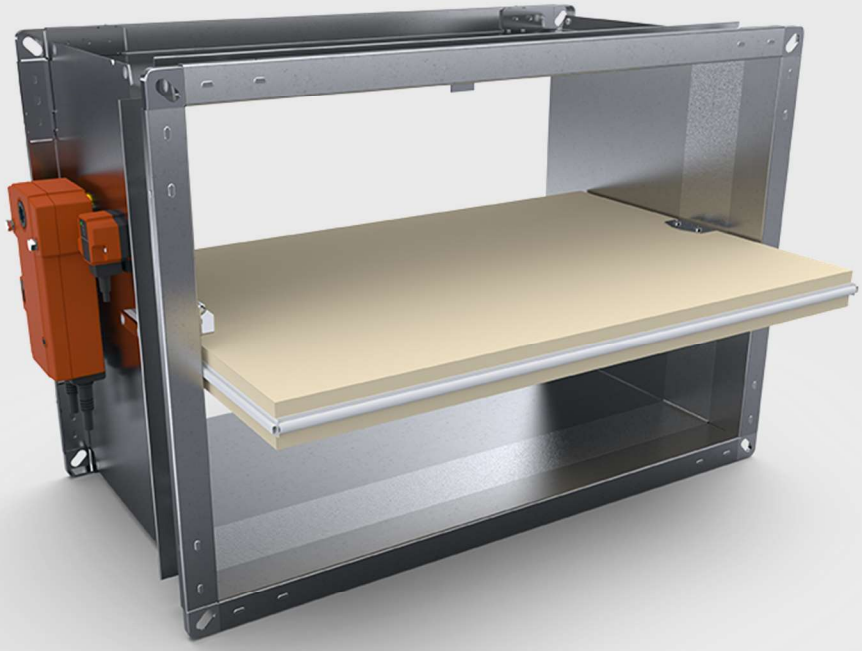

https: // www.smay.eu

CE 1438	
SMAY Sp. z o.o. 17 CSWU: 1438-CPR-0509 DWU: 011-CPR-2017	
EN 15650:2010 Fire damper type: KWP-LE,KWP-LS	
Nominal activation conditions/sensitivity: Closing/opening during the test at the right time	Pass
Response time/Closure time:	Pass
Reliability:	50 cycles. <120s
Fire resistance:	
Fire integrity - E Fire insulation - I Smoke leakage - S Mechanical stability (under E) Maintenance of the cross section (under E)	EI 120 (ve h_o i↔o) S EI 90 (ve i↔o) S EI 60 (ve i↔o) S EI 30 (ve i↔o) S
Durability:	
Opening and closing cycle test (1)	KWP-LE: 10 000 cycles, <120s (1) KWP-LS: 300 cycles, <120s (1)

Version 6.15

SMAY reserves the right to make changes to this document.

TABLE OF CONTENT

1. INTRODUCTION

The purpose of technical documentation is to familiarize the user with the intended use, design, operation principle, installation, periodic maintenance and operation of product.

2. LEGAL REGULATIONS

Fire dampers KWP-L have **Certificate of Constancy of Performance No. 1438-CPR-0509**, issued by Scientific and Research Centre for Fire Protection – National Research Institute.

The KWP-L fire dampers are designed for application in general ventilation systems as cut-off partitions separating the fire-engulfed zone from the remaining part of the building (normally open). The purpose of these dampers is to prevent the spread of fire, heat and smoke.

The dampers are designed, manufactured and tested in accordance with the following standards: **PN-EN 15650** "Ventilation for buildings – Fire dampers" and **PN-EN 13501-3** "Fire classification of construction products and building elements – Part 3: Classification using data from fire resistance tests on products and elements used in building service installations: fire resisting ducts and fire dampers."

The effectiveness of the dampers is confirmed by tests according to **PN-EN 1366-2** "Fire resistance tests for service installations – Part 2: Fire dampers."

The KWP-L fire damper is classified as tightness class C (housing tightness) on the basis of tests carried out according to **PN-EN 1751** "Ventilation for buildings. Air terminal devices. Aerodynamic testing of dampers and valves."

3. INTENDED USE

The KWP-L fire dampers are classified in the following fire resistance classes and may be installed in the following building partitions:

a. **EI 120 (ve ho i↔o) S**
   - ceilings 140 [mm] in thickness or more, and a fire resistance class EI120 or higher,
   - rigid walls 100 [mm] in thickness or more, and EI120 or a higher fire resistance class (e.g. concrete walls, solid brick walls, cellular concrete block walls, hollow masonry unit walls or concrete slab walls)
   - flexible walls, 125 [mm] in thickness or more and EI 120 or a higher fire resistance class (thicker, higher density, more board layers)
   - rigid walls, 125 [mm] in thickness or more, and EI120 or a higher fire resistance class (e.g. concrete walls, solid brick walls, cellular concrete block walls, masonry unit walls or concrete slab walls).
   - away from rigid walls 120 [mm] in thickness or more and EI120 or a higher fire resistance class (e.g. concrete walls, solid brick walls, cellular concrete block walls, hollow masonry unit walls or concrete slab walls).

b. **EI 90 (ve i↔o) S**
   - flexible walls, 100 mm in thickness or more and EI 90 or a higher fire resistance class (thicker, higher density, more board layers)
   - rigid walls, 100 mm in thickness or more, and EI90 or a higher fire resistance class (e.g. concrete walls, solid brick walls, cellular concrete block walls, hollow masonry unit walls or concrete slab walls).

c. **EI 60 (ve i↔o) S**
   - flexible walls (gypsum plasterboard walls, 12.5 mm in thickness, steel profiles) 75 mm in thickness or more and EI 60 or a higher fire resistance class (thicker, higher density, more board layers)
   - rigid walls, 75 mm in thickness or more, and EI60 or a higher fire resistance class (e.g. concrete walls, solid brick walls, cellular concrete block walls, hollow masonry unit walls or concrete slab walls).

d. **EI 30 (ve i↔o) S**
   - flexible walls, 75 mm in thickness or more and EI30 or a higher fire resistance class (thicker, higher density, more board layers)
   - rigid walls, 75 mm in thickness or more, and EI30 or a higher fire resistance class (e.g. concrete walls, solid brick walls, cellular concrete block walls, hollow masonry unit walls or concrete slab walls).

Table 1. Table of fire resistance

Construction type	Minimum thickness of the Building partition mm	Fire resistance class	Sealing type
Ceiling	≥140 mm	EI 120 (h_o i↔o) S	MORTAR
Rigid wall	≥100 mm	EI 120 (v_e i↔o) S	MORTAR
	≥100 mm	EI 90 (v_e i↔o) S	MORTAR
	≥75 mm	EI 60 (v_e i↔o) S	MORTAR
	≥75 mm	EI 30 (v_e i↔o) S	MORTAR
Rigid wall	≥125 mm	EI 120 (v_e i↔o) S	MINERAL WOOL
	≥100 mm	EI 90 (v_e i↔o) S	MINERAL WOOL
	≥75 mm	EI 60 (v_e i↔o) S	MINERAL WOOL
	≥75 mm	EI 30 (v_e i↔o) S	MINERAL WOOL
Standard wall	≥125 mm	EI 120 (v_e i↔o) S	MINERAL WOOL
	≥100 mm	EI 90 (v_e i↔o) S	MINERAL WOOL
	≥75 mm	EI 60 (v_e i↔o) S	MINERAL WOOL
	≥75 mm	EI 30 (v_e i↔o) S	MINERAL WOOL
Montage away from wall construction (silicate boards)	≥120 mm	EI 120 (v_e i↔o) S	MINERAL WOOL

where:
E – fire integrity,
I – fire insulation,
S – smoke leakage,
120/90/60/30 – duration of fulfilment of E, I and S criteria, expressed in minutes,
ve – damper installed directly in a wall,
ho – damper mounted directly in a floor,
i↔o – operating effectiveness criteria are met from inside to outside (fire inside), and from outside to inside (fire outside).

The KWP-L fire dampers may also be installed in buildings partitions with a lower fire resistance rating. In this case, the damper fire resistance rating is equal to the partition fire resistance rating, subject to the smoke leakage criterion. The KWP-L fire dampers may be installed in vertical building partitions **with either horizontal or vertical rotation axis**, with any actuator position.

The KWP-L fire dampers may also be installed in either inner or outer buildings partitions, as also at a distance from them. In case of external wall installation, use of finishing element is required (intake or exhaust), which will protect from influence of atmospheric factors. Drive system (actuator or spring mechanism) should be installed inside facility. It is recommended to use dampers in special implementation (impregnated fireproof boards, anti-corrosive steel elements).

4. TECHNICAL DESCRIPTION

The KWP-LS dampers (with a spring mechanism) and the KWP-LE dampers (with an electric spring return actuator) consist of a housing of a rectangular cross-section, a moving, single-axis isolating baffle and an actuating mechanism with a release device.

The damper housing and its interacting elements are made of galvanized steel sheet. Connection flanges are on both ends of the housing for easy connection between the duct and the damper.

There are intumescent seals on the outer and inner surfaces of the housing, in the place of perforation, around the closed isolating baffle. Their characteristic feature is that their volume increases at high temperatures, tightly filling all leaks between the baffle and the body.

The isolating baffle of the damper is made of calcium-silicate board, and a rubber seal is installed on its perimeter, ensuring the damper integrity at ambient temperature.

The KWP-LS damper is provided with a spring mechanism comprising, ea. an actuating spring, a manual release device and a thermal fuse with a nominal triggering temperature of 70 ± 5°C. When the damper is being opened with a key, the actuating spring is being tensioned. The baffle is kept in the open position by the manual release device, blocked with a thermal fuse. The damper is automatically closed as a result of triggering the thermal fuse. The damage to the thermal fuse automatically rotates the isolating baffle (to the closed position). The movement of the baffle is limited by two buffers.

The KWP-LE damper is provided with an electric spring return actuator BFL, BFN or BF series manufactured by BELIMO, and the BAT or BAE thermal fuse (72°C, 95°C optionally), constituting damper's drive system supplied by the 230 V AC or 24 V AC/DC voltage. After the voltage has been supplied, the actuator rotates the baffle to the open position. The baffle is closed due to voltage loss or when the thermal fuse is activated (the return spring in the actuator closes the baffle by returning to the non-stressed position). During normal operation of the system, the KWP-LS and KWP-LE dampers are in the open position. If a fire breaks out, the damper baffle rotates to the closed position.

The permissible air velocity in a connection duct for the KWP-LE dampers with an actuator is 12 m/s and 8 m/s for the KWP-LS dampers with a spring mechanism.

The range of dampers covers the following dimensions: a clear damper width from 160 to 800 mm (10 mm intervals from the width 200 mm) and a clear damper height from 200 to 500 mm (10 mm intervals). The primary type series of damper dimensions, including actuators, is provided in the table below.

Table 2. Type series of damper dimensions, including used actuators

<table>
<tr><th colspan="10">B [mm]</th></tr>
<tr><th rowspan="5">H [mm]</th><th></th><th>160</th><th>200</th><th>300</th><th>400</th><th>500</th><th>600</th><th>700</th><th>800</th></tr>
<tr><th>200</th><td colspan="8">BFL</td></tr>
<tr><th>300</th><td colspan="8">BFL</td></tr>
<tr><th>400</th><td colspan="6">BFL</td><td colspan="2">BFN</td></tr>
<tr><th>500</th><td colspan="4">BFL</td><td colspan="4">BFN</td></tr>
</table>

BFL actuators are used for the damper clear area of ≤ 0,24 [m^2].
BFN actuators are used for the damper clear area of >0,24 [m^2].
BF actuators are used for all series fire dampers.

Depending on the actuation system used, the dampers are marked as follows:

- **KWP-LS** - the dampers with a spring mechanism,
- **KWP-LE** - the dampers with an electric spring return actuator,

The length of KWP-L dampers is L=350 mm.

Special execution of dampers.

The dampers may also be fitted with limit switches indicating the open or closed position of the baffle.

KWP-L dampers may be fitted with inspection openings for checking the damper condition once it is installed in the ventilation system.

In a special version, resistant to aggressive environments, all components of the damper are made of stainless steel, whereas the damper baffle is impregnated with a fire-resistant board impregnation.

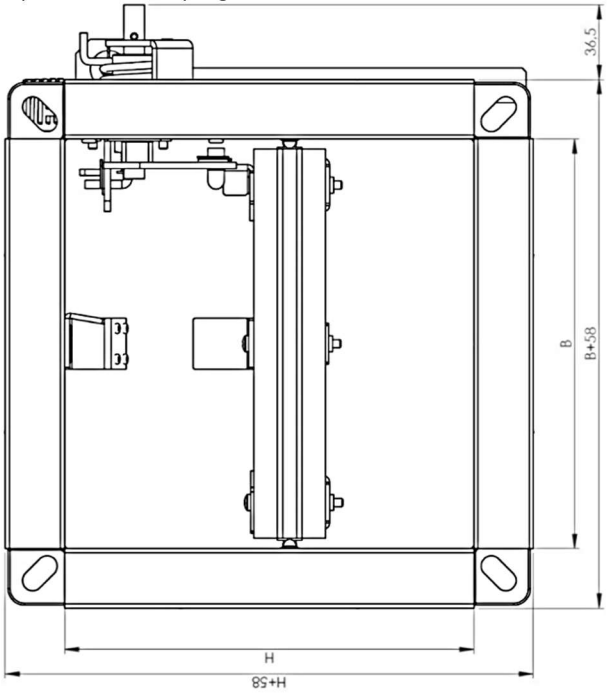

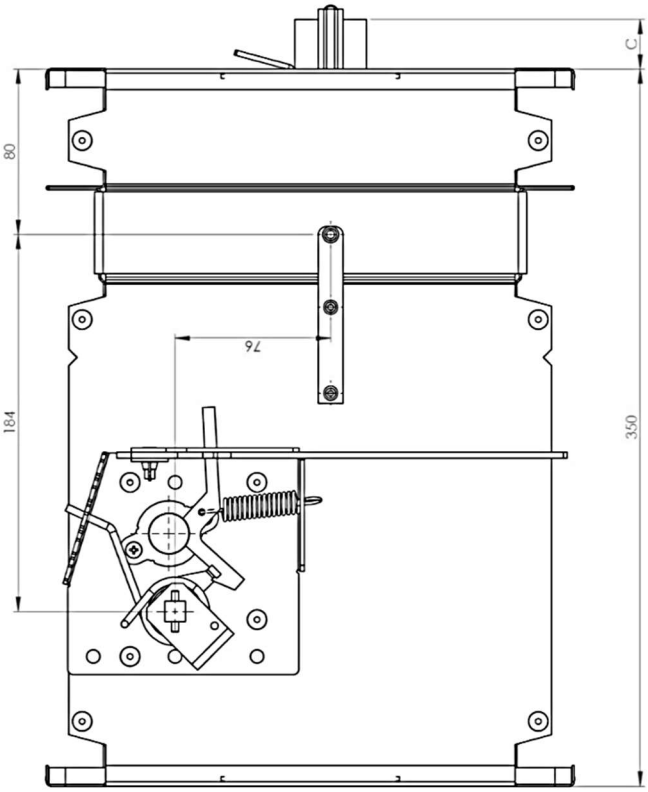

Where:
H - clear damper height;
B - clear damper width
C=25 mm for H<250 mm;
C=((H-10)/2)-80 for H≥250 mm.

Figure 1. KWP-LS damper (with a spring mechanism)

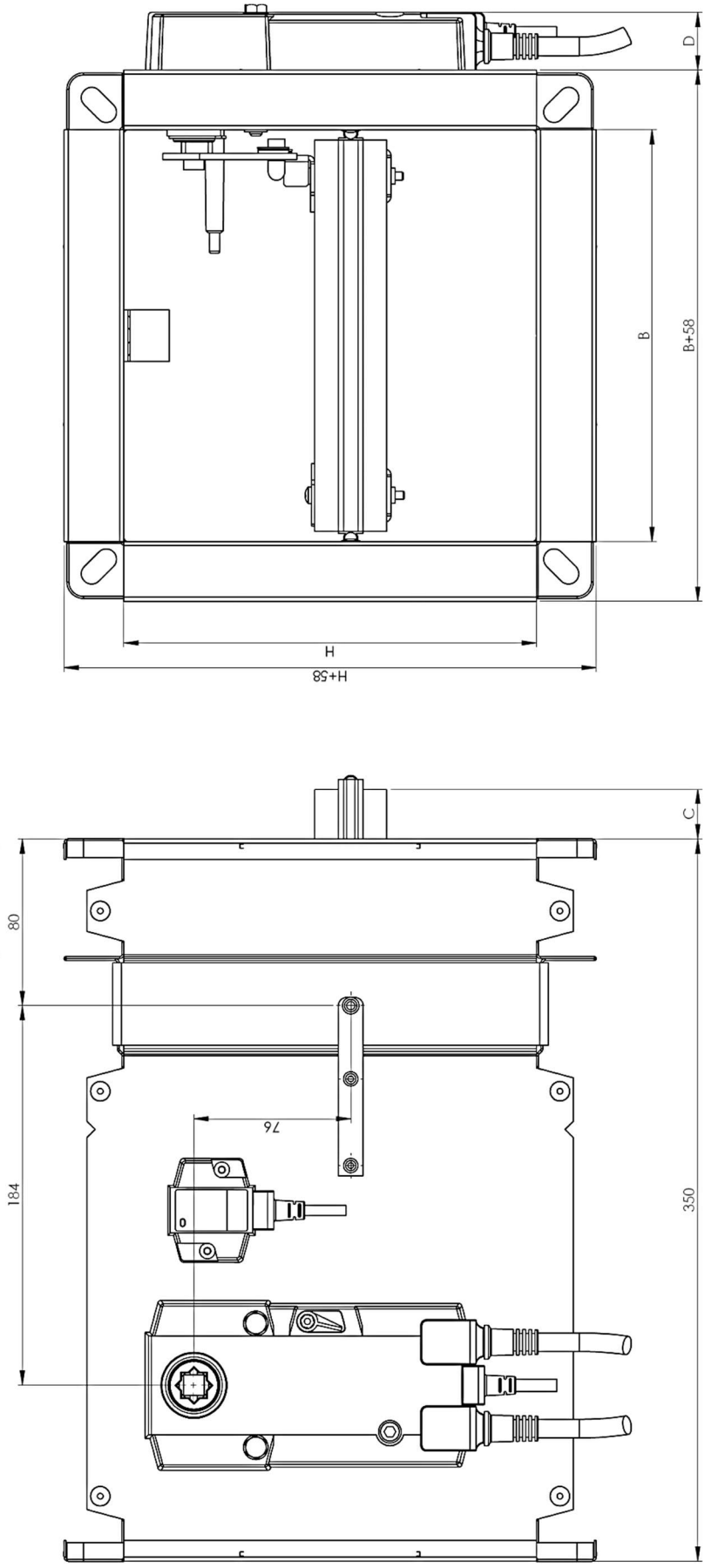

Where:
H - clear damper height;
B - clear damper width
C=25 mm for H<250 mm;
C=((H-10)/2)-80 for H≥250 mm.
D=28 mm for BFL actuator;
D=30 mm for BFN actuator.

Figure 2. KWP-LE damper with an electric actuator

Table 3. KWP-LE weight, [kg]

KWP-LE		B [mm]							
		160	**200**	**300**	**400**	**500**	**600**	**700**	**800**
H [mm]	**200**	5,0	6,0	7,0	8,1	9,1	10,1	11,2	12,2
	300	5,8	7,0	8,2	9,5	10,7	11,9	13,1	14,3
	400		8,1	9,5	10,9	12,2	13,6	15,4	16,7
	500			10,7	12,2	14,1	15,7	17,3	18,8

Table 4. KWP-LS weight, [kg]

KWP-LS		B [mm]							
		160	**200**	**300**	**400**	**500**	**600**	**700**	**800**
H [mm]	**200**	4,9	5,9	6,9	8,0	9,0	10,1	11,1	12,1
	300	5,7	6,9	8,2	9,4	10,3	11,8	13,0	14,2
	400		8,0	9,4	10,8	12,2	13,6	14,9	16,3
	500			10,6	12,2	13,7	15,3	16,9	18,4

5. BELIMO ELECTRIC ACTUATORS USED IN KWP-LE

Spring-return 90° actuator BFL series, combined with thermoelectric tripping device BAT:

- BFL230-T,
- BFL24-T,
- BFL24-T-ST,

where:
ST - connection plug.

Spring-return 90° actuator BFN series, combined with thermoelectric tripping device BAT:

- BFN230-T,
- BFN24-T,
- BFN24-T-ST,

where:
ST - connection plug.

Spring-return 90° actuator BF series, combined with thermoelectric tripping device BAE:

- BF230-TN,
- BF24-TN,
- BF24-TN-ST,
- BF24-TL-TN-ST

where:
ST-connection plug,
TL- communicative control

Wiring diagram BFL230-T and BFN230-T

AC 230 V, open-close

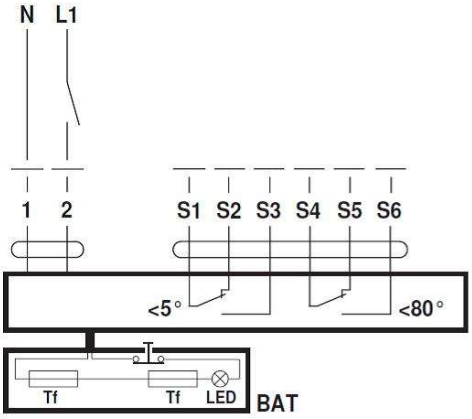

Cable colours:
1 = blue
2 = brown
S1 = violet
S2 = red
S3 = white
S4 = orange
S5 = pink
S6 = grey
Tf: Thermal fuse (see “Technical data”)

Wiring diagram BFL24-T and BFN24-T

AC/DC 24 V, open-close

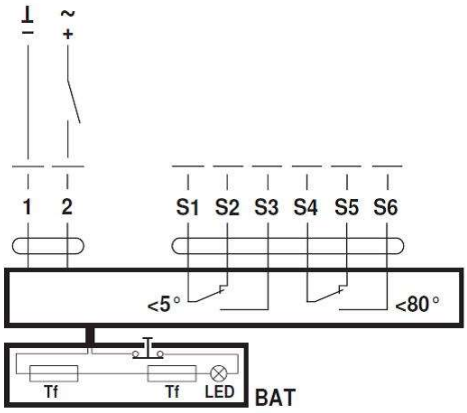

Cable colours:
1 = black
2 = red
S1 = violet
S2 = red
S3 = white
S4 = orange
S5 = pink
S6 = grey
Tf: Thermal fuse (see “Technical data”)

Wiring diagram BFL24-T-ST and BFN24-T-ST

AC/DC 24 V, open-close

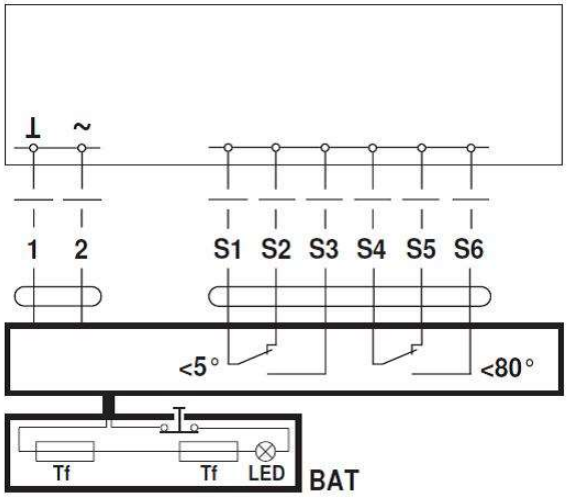

Wiring diagram BFL24-SR-T

AC/DC 24 V, modulating

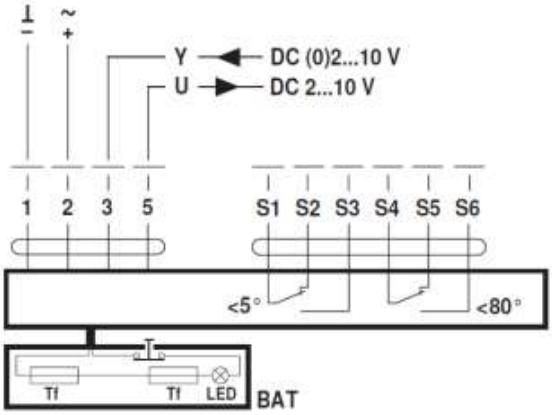

Cable colours:
1 = black
2 = red
3 = white
5 = white
S1 = violet
S2 = red
S3 = white
S4 = orange
S5 = pink
S6 = grey
Tf: Thermal fuse (see Technical data)

Wiring diagram BF230-TN

AC 230 V, open-close

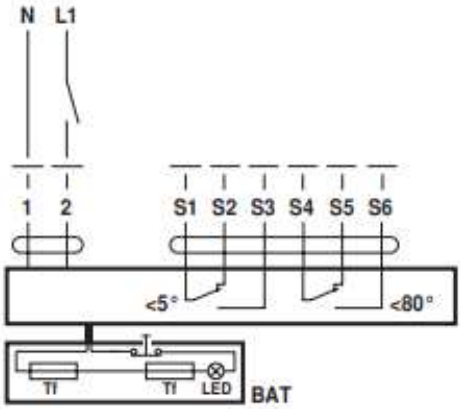

Cable colours:
1 = blue
2 = brown
S1 = violet
S2 = red
S3 = white
S4 = orange
S5 = pink
S6 = grey
Tf: Thermal fuse (see "Technical data")

Wiring diagram BF24-TN

AC/DC 24 V, open-close

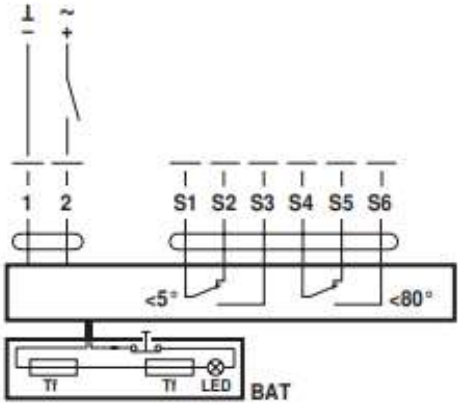

Cable colours:
1 = black
2 = white
S1 = violet
S2 = red
S3 = white
S4 = orange
S5 = pink
S6 = grey
Tf: Thermal fuse (see "Technical data")

Wiring diagram BF24-TN-ST

AC/DC 24 V, open-close

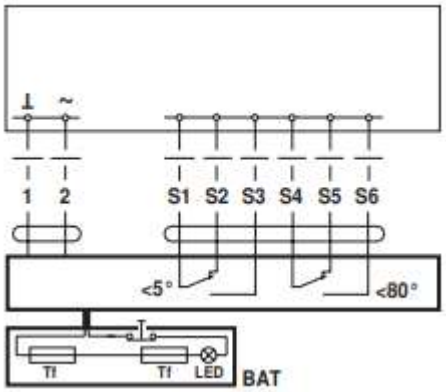

Technical data:	BFL230-T	BFN230-T
Nominal voltage	AC 230 V	AC 230 V
Nominal voltage frequency	50/60 Hz	50/60 Hz
Nominal voltage range	AC 198...264 V	AC 198...264 V
Power consumption in operation	3.5 W	5 W
Power consumption in rest position	1.1 W	2.1 W
Power consumption for wire sizing	6.5 VA	10 VA
Power consumption for wire sizing note	Imax 4 A @ 5 ms	Imax 4 A @ 5 ms
Auxiliary switch	2 x SPDT	2 x SPDT
Switching capacity auxiliary switch	1 mA...3 (0.5 inductive) A, AC 250 V	1 mA...3 (0.5 inductive) A, AC 250 V
Switching points auxiliary switch	5° / 80°	5° / 80°
Connection supply / control	Cable 1 m, 2 x 0.75 mm² (halogen-free)	Cable 1 m, 2 x 0.75 mm² (halogen-free)
Connection auxiliary switch	Cable 1 m, 6 x 0.75 mm² (halogen-free)	Cable 1 m, 6 x 0.75 mm² (halogen-free)
Cable length thermoelectric tripping device	0.5 m	1 m
Torque motor	Min. 4 Nm	Min. 9 Nm
Torque spring return	Min. 3 Nm	Min. 7 Nm
Direction of rotation motor	Can be selected by mounting L/R	Can be selected by mounting L/R
Manual override	With position stop	With position stop
Angle of rotation	Max. 95°	Max. 95°
Running time motor	<60 s / 90°	<60 s / 90°
Running time spring-return	20 s @ -10...55°C / <60 s @ -30...-10°C	20 s @ -10...55°C / <60 s @ -30...-10°C
Sound power level motor	<43 dB(A)	<55 dB(A)
Sound power level spring-return	<62 dB(A)	<67 dB(A)
Spindle driver	Form fit 12x12 mm, Continuous hollow shaft	Form fit 12x12 mm, Continuous hollow shaft
Position indication	Mechanically, with pointer	Mechanically, with pointer
Service life	Min. 60,000 safety positions	Min. 60,000 safety positions
Response temperature thermal fuse	Duct outside temperature 72°C Duct inside temperature 72°C	Duct outside temperature 72°C Duct inside temperature 72°C
Protection class IEC/EN	II Protective insulated	II Protective insulated
Protection class auxiliary switch IEC/EN	II Protective insulated	II Protective insulated
Degree of protection IEC/EN	IP54 in all mounting positions	IP54 in all mounting positions
EMC	CE according to 2014/30/EU	CE according to 2014/30/EU
Low voltage directive	CE according to 2014/35/EU	CE according to 2014/35/EU
Certification IEC/EN	IEC/EN 60730-1 and IEC/EN 60730-2-14	IEC/EN 60730-1 and IEC/EN 60730-2-14
Mode of operation	Type 1.AA.B	Type 1.AA.B
Rated impulse voltage supply / control	4 kV	4 kV
Control pollution degree	3	3
Ambient temperature normal operation	-30...55°C	-30...55°C
Ambient temperature safety operation	The safety position will be attained up to max. 75°C	The safety position will be attained up to max. 75°C
Non-operating temperature	-40...55°C	-40...55°C
Ambient humidity	95% r.h., non-condensing	95% r.h., non-condensing
Maintenance	Maintenance-free	Maintenance-free
Weight	1.2 kg	1.5 kg

Technical data:	**BFL24-T-(-ST)**	**BFN24-T(-ST)**
Nominal voltage	AC/DC 24 V	AC/DC 24 V
Nominal voltage frequency	50/60 Hz	50/60 Hz
Nominal voltage range	AC 19.2...28.8 V / DC 21.6...28.8 V	AC 19.2...28.8 V / DC 21.6...28.8 V
Power consumption in operation	2.5 W	4 W
Power consumption in rest position	0.8 W	1.4 W
Power consumption for wire sizing	4 VA	6 VA
Power consumption for wire sizing note	Imax 8.3 A @ 5 ms	Imax 8.3 A @ 5 ms
Auxiliary switch	2 x SPDT	2 x SPDT
Switching capacity auxiliary switch	1 mA...3 (0.5 inductive) A, AC 250 V	1 mA...3 (0.5 inductive) A, AC 250 V
Switching points auxiliary switch	5° / 80°	5° / 80°
Connection supply / control	Cable 1 m, 2 x 0.75 mm² (halogen-free)	Cable 1 m, 2 x 0.75 mm² (halogen-free)
Connection auxiliary switch	Cable 1 m, 6 x 0.75 mm² (halogen-free)	Cable 1 m, 6 x 0.75 mm² (halogen-free)
Cable length thermoelectric tripping device	0.5 m	1 m
Torque motor	Min. 4 Nm	Min. 9 Nm
Torque spring return	Min. 3 Nm	Min. 7 Nm
Direction of rotation motor	Can be selected by mounting L/R	Can be selected by mounting L/R
Manual override	With position stop	With position stop
Angle of rotation	Max. 95°	Max. 95°
Running time motor	<60 s / 90°	<60 s / 90°
Running time spring-return	20 s @ -10...55°C / <60 s @ -30...-10°C	20 s @ -10...55°C / <60 s @ -30...-10°C
Sound power level motor	<43 dB(A)	<55 dB(A)
Sound power level spring-return	<62 dB(A)	<67 dB(A)
Spindle driver	Form fit 12x12 mm, Continuous hollow shaft	Form fit 12x12 mm, Continuous hollow shaft
Position indication	Mechanically, with pointer	Mechanically, with pointer
Service life	Min. 60,000 safety positions	Min. 60,000 safety positions
Response temperature thermal fuse	Duct outside temperature 72°C Duct inside temperature 72°C	Duct outside temperature 72°C Duct inside temperature 72°C
Protection class IEC/EN	III Safety extra-low voltage	III Safety extra-low voltage
Protection class auxiliary switch IEC/EN	II Protective insulated	II Protective insulated
Degree of protection IEC/EN	IP54 in all mounting positions	IP54 in all mounting positions
EMC	CE according to 2014/30/EU	CE according to 2014/30/EU
Low voltage directive	CE according to 2014/35/EU	CE according to 2014/35/EU
Certification IEC/EN	IEC/EN 60730-1 and IEC/EN 60730-2-14	IEC/EN 60730-1 and IEC/EN 60730-2-14
Mode of operation	Type 1.AA.B	Type 1.AA.B
Rated impulse voltage supply / control	0.8 kV	0.8 kV
Control pollution degree	3	3
Ambient temperature normal operation	-30...55°C	-30...55°C
Ambient temperature safety operation	The safety position will be attained up to max. 75°C	The safety position will be attained up to max. 75°C
Non-operating temperature	-40...55°C	-40...55°C
Ambient humidity	95% r.h., non-condensing	95% r.h., non-condensing
Maintenance	Maintenance-free	Maintenance-free
Weight	1.2 kg	1.5 kg

	Technical data:	**BF230-TN**
Electrical data	Nominal voltage	AC 230 V
	Nominal voltage frequency	50/60 Hz
	Nominal voltage range	AC 198...264 V
	Power consumption in operation	8.5 W
	Power consumption in rest position	3 W
	Power consumption for wire sizing	11 VA
	Power consumption for wire sizing note	Imax 0.5 A @ 5 ms
	Auxiliary switch	2 x SPDT
	Switching capacity auxiliary switch	1 mA...6 A (3 A inductive), DC 5 V...AC 250 V (II reinforced insulation)
	Switching points auxiliary switch	5° / 80°
	Connection supply / control	Cable 1 m, 2 x 0.75 mm² (halogen-free)
	Connection auxiliary switch	Cable 1 m, 6 x 0.75 mm² (halogen-free)
Functional data	Torque motor	18 Nm
	Torque fail-safe	12 Nm
	Direction of rotation motor	Can be selected by mounting L/R
	Manual override	with position stop
	Angle of rotation	Max. 95°
	Running time motor	<120 s / 90°
	Running time fail-safe	16 s @ -10...55°C / <60 s @ -30...-10°C
	Running time fail-safe note	@ -10...55°C / <60 s @ -30...-10°C
	Sound power level, motor	45 dB(A)
	Sound power level, fail-safe	63 dB(A)
	Mechanical interface	Form fit 12x12 mm, Non-continuous hollow shaft
	Position indication	Mechanically, with pointer
	Service life	Min. 60'000 safety positions
Safety	Protection class IEC/EN	II reinforced insulation
	Protection class auxiliary switch IEC/EN	II reinforced insulation
	Degree of protection IEC/EN	IP54 in all mounting positions
	EMC	CE according to 2014/30/EU
	Low voltage directive	CE according to 2014/35/EU
	Certification IEC/EN	IEC/EN 60730-1 and IEC/EN 60730-2-14
	Mode of operation	Type 1.AA.B
	Rated impulse voltage supply / control	4 kV
	Control pollution degree	3
	Ambient temperature normal operation	-30...50°C
	Ambient temperature safety operation	The safety position will be attained up to max. 75°C
	Storage temperature	-40...50°C
	Ambient humidity	Max. 95% r.H., non-condensing
	Servicing	maintenance-free
Weight	Weight	3.1 kg

Technical data:		**BF24-TN**
Electrical data	Nominal voltage	AC/DC 24 V
	Nominal voltage frequency	50/60 Hz
	Nominal voltage range	AC 19.2...28.8 V / DC 21.6...28.8 V
	Power consumption in operation	7 W
	Power consumption in rest position	2 W
	Power consumption for wire sizing	10 VA
	Power consumption for wire sizing note	Imax 8.3 A @ 5 ms
	Auxiliary switch	2 x SPDT
	Switching capacity auxiliary switch	1 mA...6 A (3 A inductive), DC 5 V...AC 250 V (II reinforced insulation)
	Switching points auxiliary switch	5° / 80°
	Connection supply / control	Cable 1 m, 2 x 0.75 mm² (halogen-free)
	Connection auxiliary switch	Cable 1 m, 6 x 0.75 mm² (halogen-free)
Functional data	Torque motor	18 Nm
	Torque fail-safe	12 Nm
	Direction of rotation motor	Can be selected by mounting L/R
	Manual override	with position stop
	Angle of rotation	Max. 95°
	Running time motor	<120 s / 90°
	Running time fail-safe	16 s tamb = 20°C
	Running time fail-safe note	tamb = 20°C
	Sound power level, motor	45 dB(A)
	Sound power level, fail-safe	63 dB(A)
	Mechanical interface	Form fit 12x12 mm, Non-continuous hollow shaft
	Position indication	Mechanically, with pointer
	Service life	Min. 60'000 safety positions
Safety	Protection class IEC/EN	III Safety Extra-Low Voltage (SELV)
	Protection class auxiliary switch IEC/EN	II reinforced insulation
	Degree of protection IEC/EN	IP54 in all mounting positions
	EMC	CE according to 2014/30/EU
	Low voltage directive	CE according to 2014/35/EU
	Certification IEC/EN	IEC/EN 60730-1 and IEC/EN 60730-2-14
	Mode of operation	Type 1.AA.B
	Rated impulse voltage supply / control	0.8 kV
	Control pollution degree	3
	Ambient temperature normal operation	-30...50°C
	Ambient temperature safety operation	The safety position will be attained up to max. 75°C
	Storage temperature	-40...50°C
	Ambient humidity	Max. 95% r.H., non-condensing
	Servicing	maintenance-free
Weight	Weight	2.8 kg

6. CONDITIONS OF TRANSPORT AND STORAGE

Fire dampers KWP-L should be stored in cardboard boxes and/or on pallets. KWP-LE should have a pre-protected actuator cardboard box. Fire dampers should be stored indoors, providing protection against atmospheric agents, at a minimum temperature of +5°C.

Do not allow mechanical damage of damper, that may be caused e.g. blows or dropping.

After each transport, visual inspection of each fire damper must be carried out.

7. INSTALLATION TECHNOLOGY

Before installing fire dampers, check whether the damper has been damaged during transport or storage.
Place the damper straight on a flat surface and check that the damper opens and closes properly throughout its full range of motion. Opening and full closing must be smooth, and the movement of rotating elements must not be hindered. If the damper partition is blocked, further installation is not allowed. In the case of dampers with an actuator, open the damper with the key attached to the actuator. Do not pull the damper by its partition to open/close, this may cause permanent damage to the device which is not covered by the warranty.

Before installation, protect the damper with foil or other covering material to protect it against dirt and, consequently, damage to the damper components. Moreover, in rectangular dampers, it is necessary to use assembly wedges and a spacer to protect the body against compression during assembly. Be especially careful not to let metal objects (e.g. tools, loose fasteners) get into the damper and stay there after installing the ventilation ducts.

To be able to preserve the declared resistance, insulation and smoke leakage EIS120, EIS90, EIS60, EIS30, dampers should be installed on wall, which was classified as EIS120, EIS90, EIS60, EIS30.
The KWP-L fire dampers may also be installed in buildings partitions with a lower fire resistance rating. In this case, the damper fire resistance rating is equal to the partition fire resistance rating, subject to the smoke leakage criterion.
Ducts made of flammable and non-flammable materials can be connected to the damper. Ducts should be installed that they can not load the damper during fire. Ducts lengthening during fire can be compensated by support and knee.
ATTENTION: Distance between fire dampers or fire damper and construction elements must be compatible with standard 1366-2:

a. Minimal 200 mm between fire damper, which are installed in different ventilating ducts,
b. Minimal 75 mm between fire damper and construction element (wall/ceiling).

7.1. INSTALLATION TECHNOLOGY - CEILING

a. Make an opening in the ceiling with the 100 [mm] (acceptable 80 ÷ 120 [mm]) greater than the nominal dimensions of the fire damper = B+100 and H+100. When the opening are different than B+100 x H+100, the dimensions of mounting support should be customized.

b. Put the closed fire damper into the installation opening and support or suspend, in this way that the minimum installation depth mark is on the plane of ceiling surface or inside the opening and that it is possible to install the mounting brackets

c. Install the mounting brackets on each side.

   Quantity of mounting brackets:

   Side length up to 500 mm – 1 pcs.

   Side length from 500 to 800 mm – 2 pcs.

   Mount the mounting brackets to the ceiling using dowels.

d. After setting the fire damper as described, mount the mounting brackets, fill the gap between the fire damper and the ceiling with cement, cement-lime mortar or concrete.

e. After the mortar has dried (about 48 hours), remove the supports or suspensions, check the fire damper correct operation and leave it in open position.

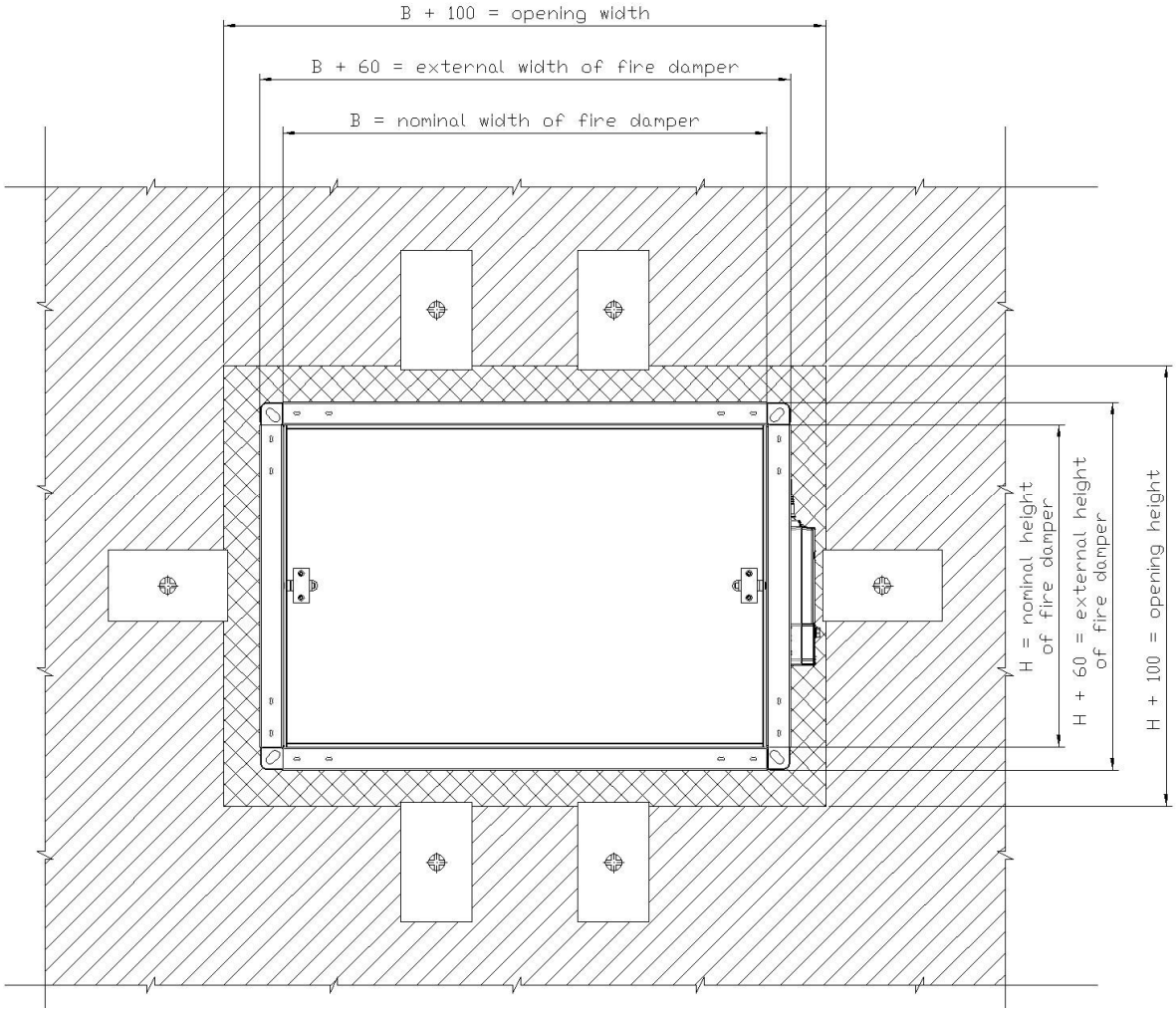

Figure 3. Installation method of fire dampers KWP-L in ceiling

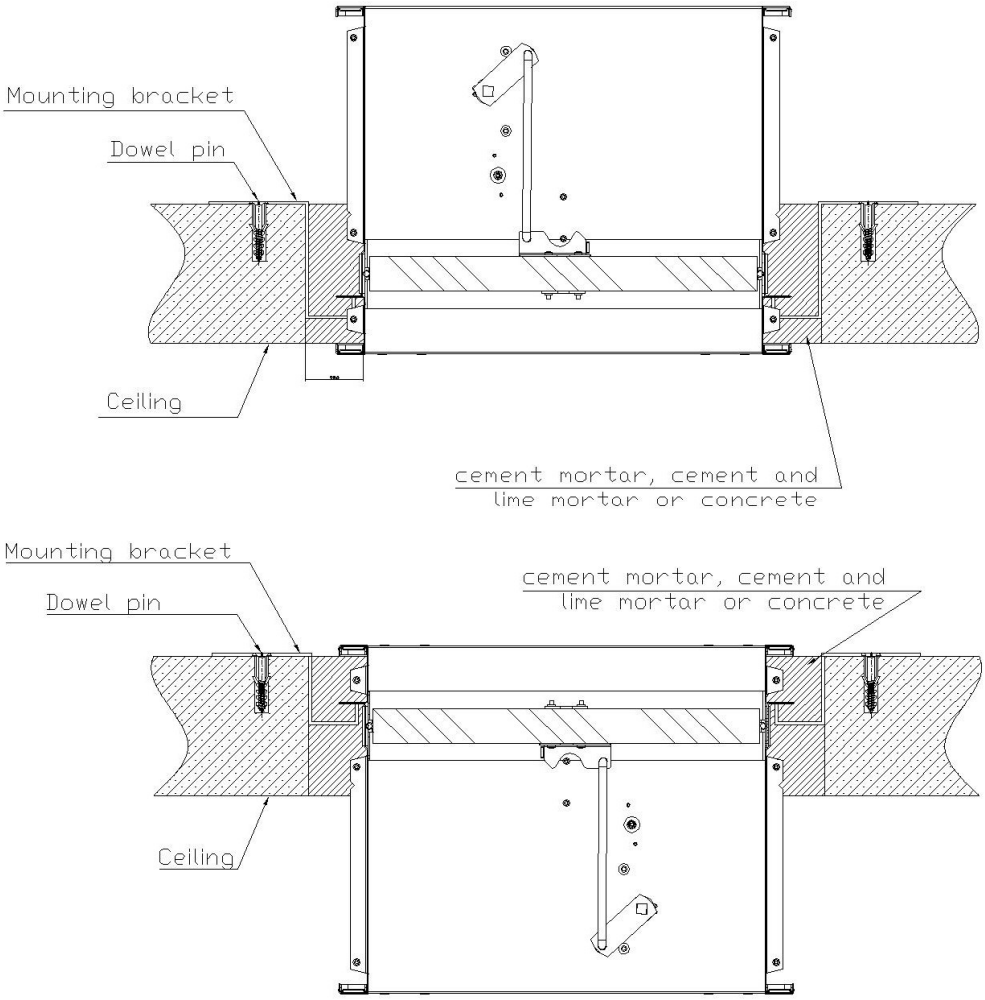

Figure 4. Installation method of fire dampers KWP-L in ceiling

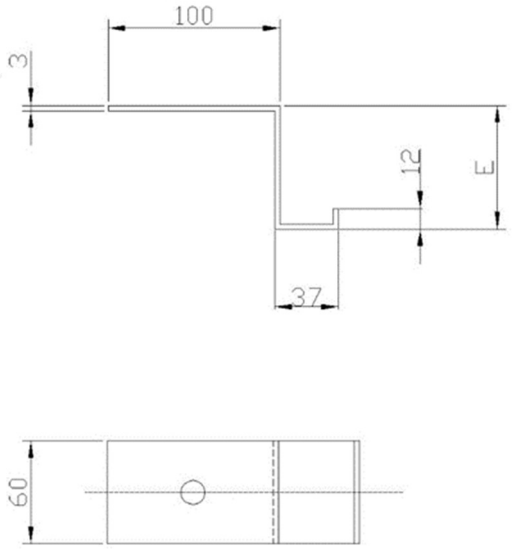

Figure 5. Proposed dimensions of mounting brackets for installation in a ceiling 140 mm thick;

	Actuator under ceiling	Actuator above ceiling
E [mm]	=Thickness of ceiling - 69	=120

For ceiling with thickness greater than 150 [mm]: connect the damper to the duct before the damper isolation with cement mortar (the damper frame will be bricked up along with a part of the duct).

7.2. INSTALLATION TECHNOLOGY – RIGID WALL

7.2.1. INSTALLATION USING MORTAR

a. Make an opening in the wall with the dimensions 100 [mm] (acceptable 80 ÷ 120 [mm]) greater than the nominal dimensions of the fire damper = B+100 and H+100.
b. Put the closed fire damper into the installation opening and support or suspend, in this way that the minimum installation depth mark is on the plane of wall surface.
c. After setting the fire damper as described, fill the gap between the fire damper and the wall with cement, cement-lime mortar or concrete.
d. After the mortar has dried (about 48 hours), remove the supports or suspensions, check the fire damper correct operation and leave it in open position.

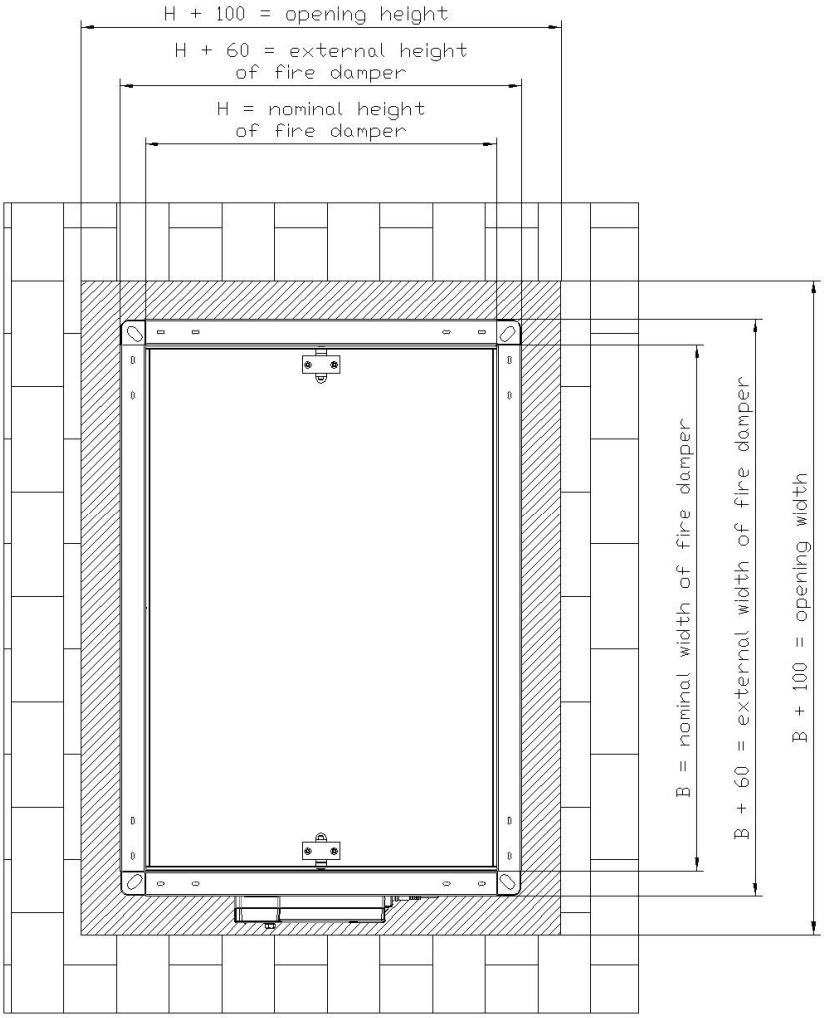

Figure 6. Installation method of fire dampers KWP-L in rigid wall with vertical rotation axis of baffle

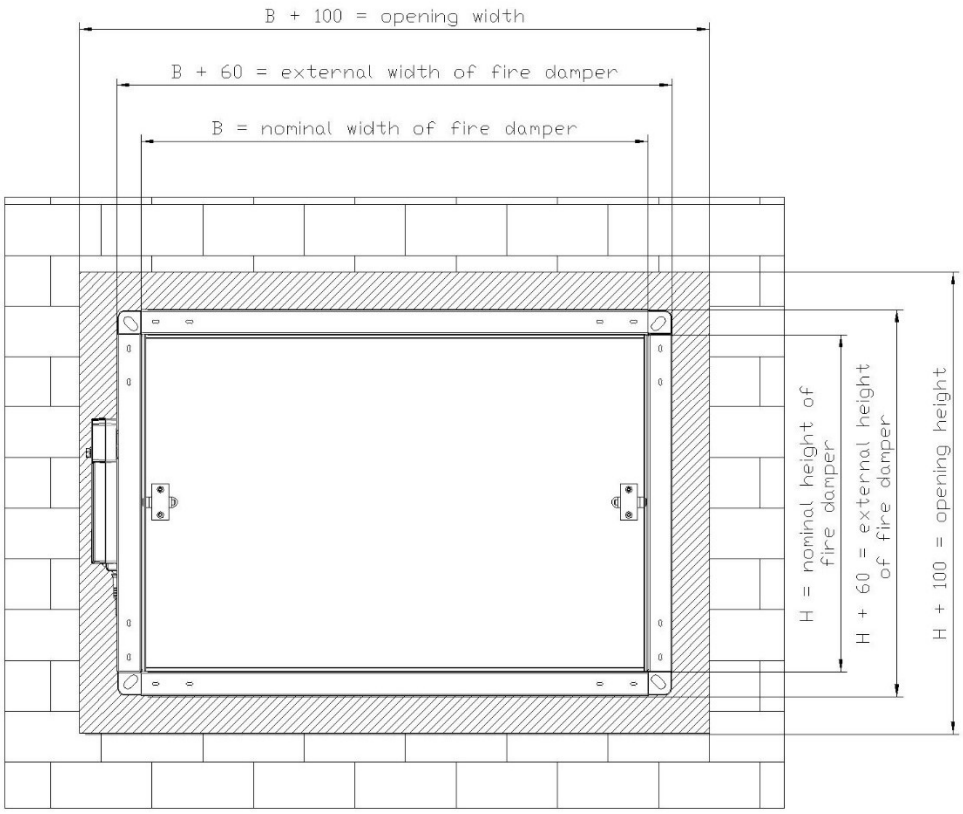

Figure 7. Installation method of fire dampers KWP-L in rigid wall with horizontal rotation axis of baffle

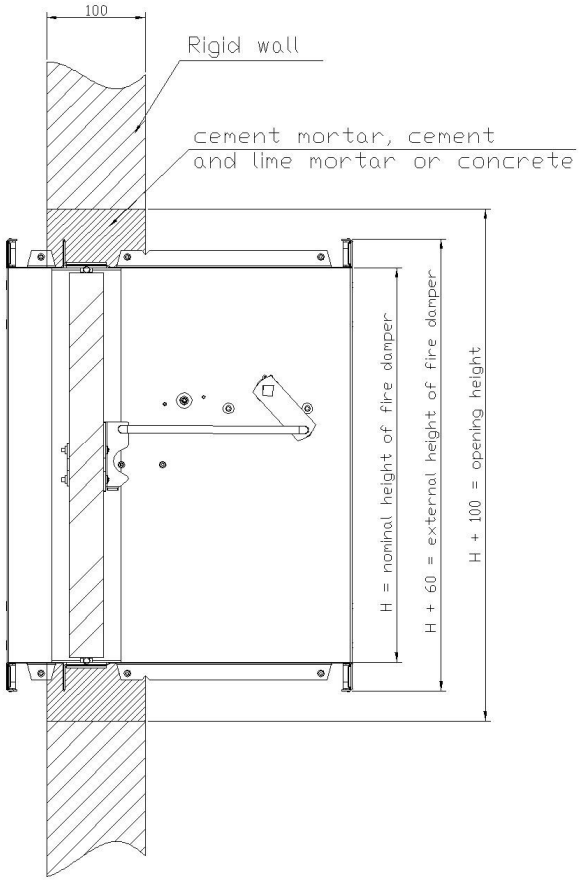

Figure 8. Installation method of fire dampers KWP-L in rigid wall

7.2.2. INSTALLATION USING MINERAL WOOL

a. Make an opening in the wall with the dimensions 100 [mm] (acceptable 80 ÷ 120 [mm]) greater than the nominal dimensions of the fire damper = B+100 and H+100.

b. Put the closed fire damper into the installation opening and support or suspend, in this way that the minimum installation depth mark is on the plane of wall surface.

c. After setting the fire damper as described, fill the gap between the fire damper and the wall with non-flammable mineral wool of high density, 100 kg/m^3 or more.

d. Seal the place of filling with mineral wool using the sealing compounds Hilti Firestop Coating CP 673, Promastop-CC, Promaseal-Mastic or Soudal Firesilicone B1 FR.

e. Mount collar, both side of wall, made of GKF boards, 12,5 mm thick and 150 mm wide, using screws (with a cut hole for the damper). For easy assembly, the collar can be made of two parts.

f. After mounting the collar, remove the supports or suspension, check the fire damper correct operation and leave it in open position.

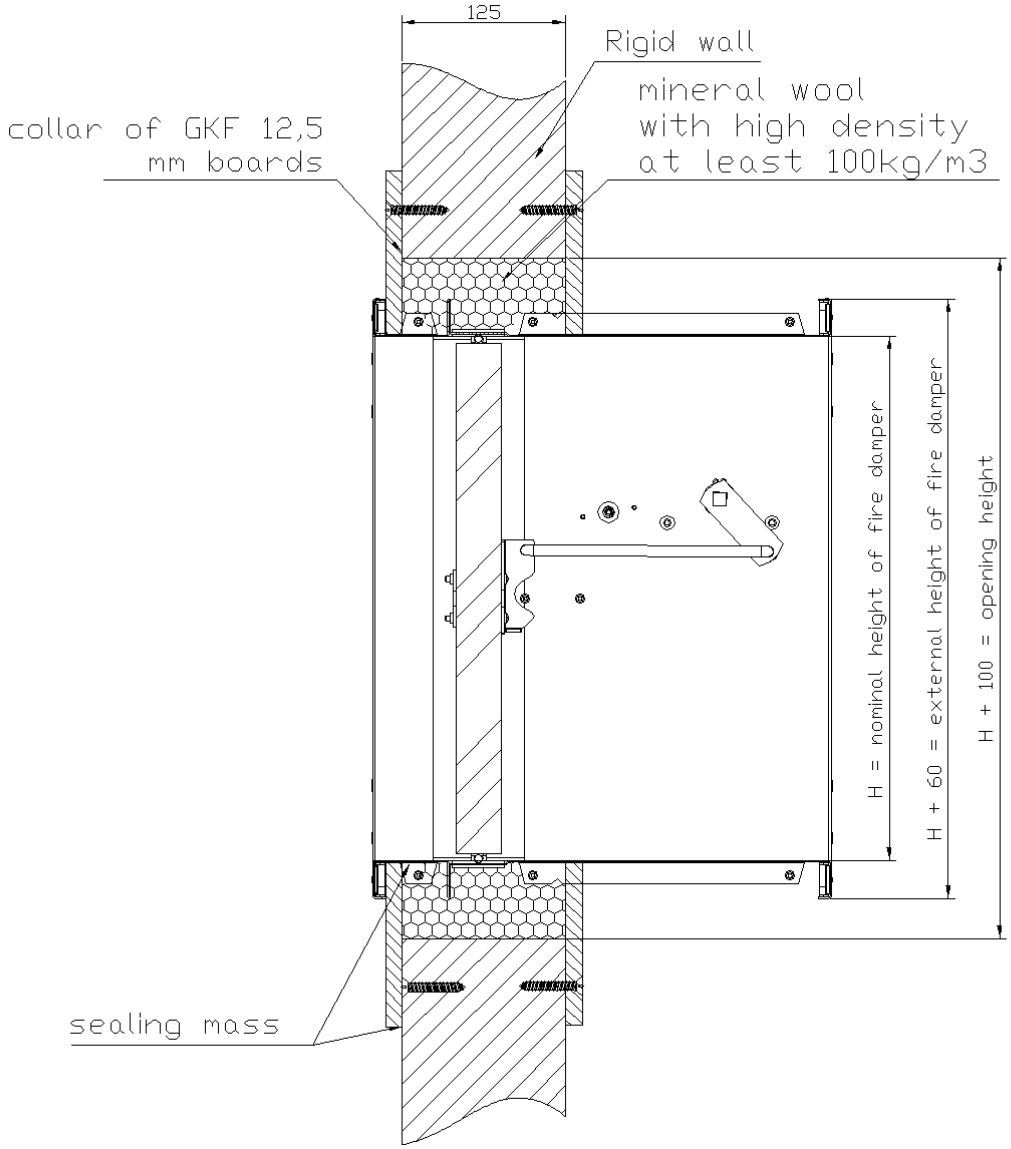

Figure 9. Installation method of fire dampers KWP-L in rigid wall

7.3. INSTALLATION TECHNOLOGY –FLEXIBLE WALL

a. Make an opening in the wall with the dimensions 100 [mm] (acceptable 80 ÷ 120 [mm]) greater than the nominal dimensions of the fire damper = B+100 i H+100.
b. Make a frame of two layers of GKF boards, 12,5 mm thick and the width relative to the width of opening, mounting by screws remembering to carefully seal the contact edges with a mastic: Hilti Firestop Coating CP 673, Promastop-CC, Promaseal-Mastic Soudal Firesilicone B1 FR.
c. Put the closed fire damper into the installation opening and support or suspend, in this way that the minimum installation depth mark is on the plane of the flange surface.
d. After setting the fire damper as described, fill the gap between the fire damper and the wall with non-flammable mineral wool of high density, 100 kg/m^3 or more.
e. Seal the place of filling with mineral wool using the sealing compounds given in pts.2
f. Mount collar, both side of wall, made of GKF boards, 12,5 mm thick and 150 mm wide, using screws.
g. After mounting the collar, remove the supports or suspensions, check the fire damper correct operation and leave it in open position.

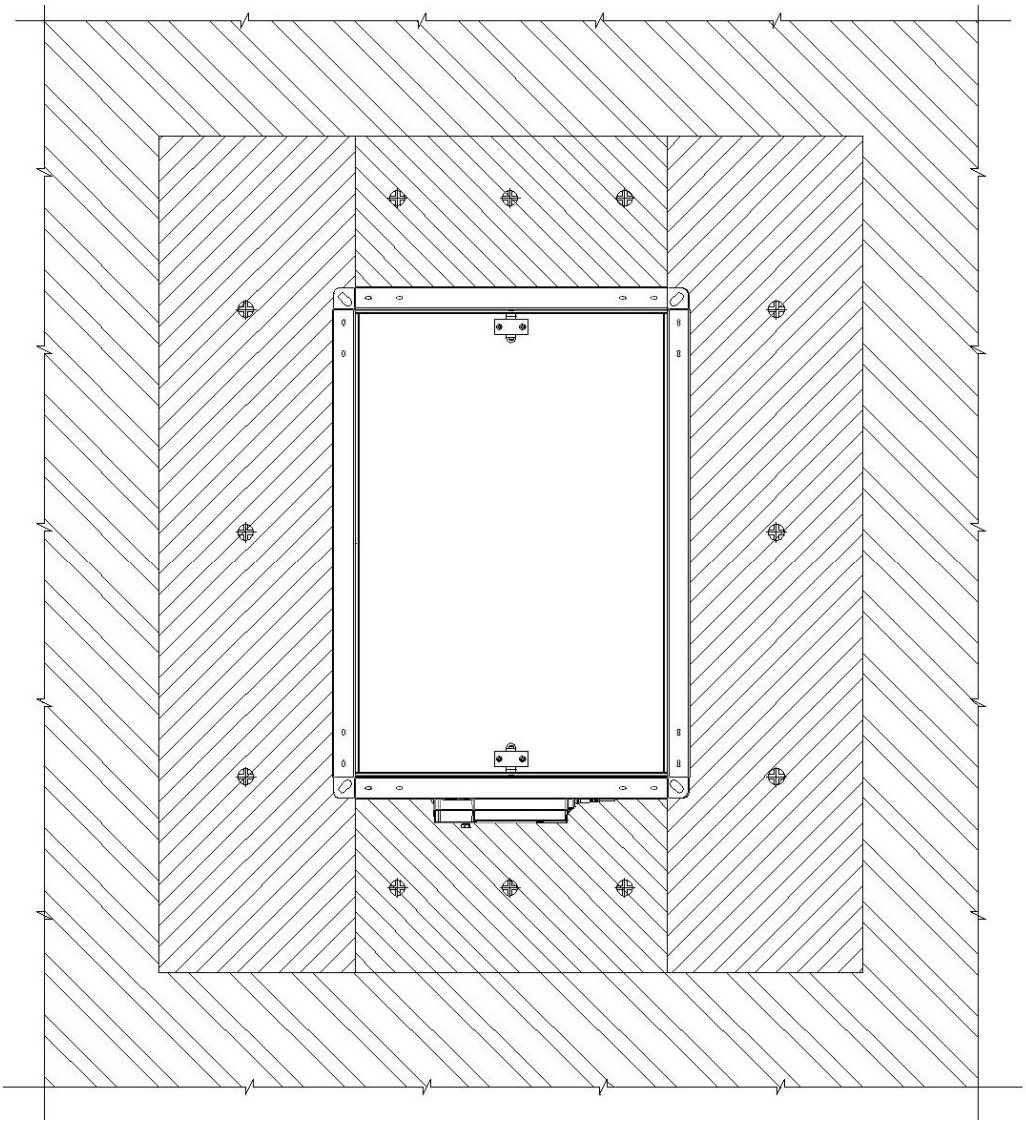

Figure 10. Installation method of fire dampers KWP-L in flexible wall with vertical rotation axis of baffle

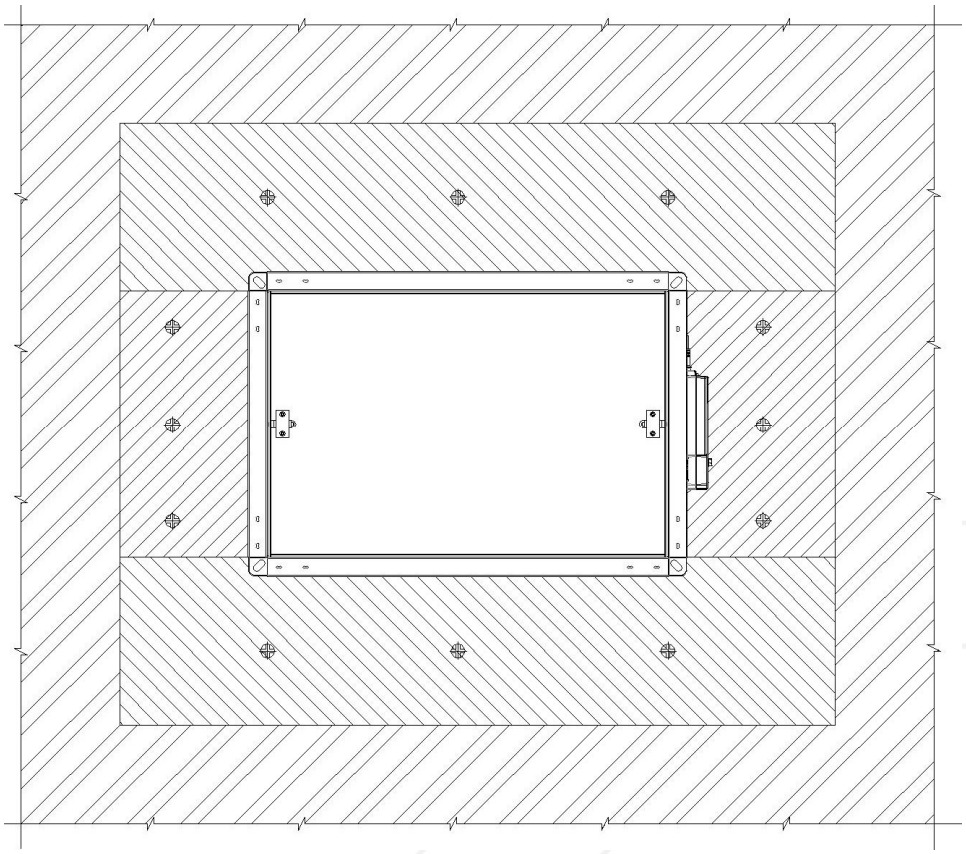

Figure 11. Installation method of fire dampers KWP-L in flexible wall with horizontal rotation axis of baffle

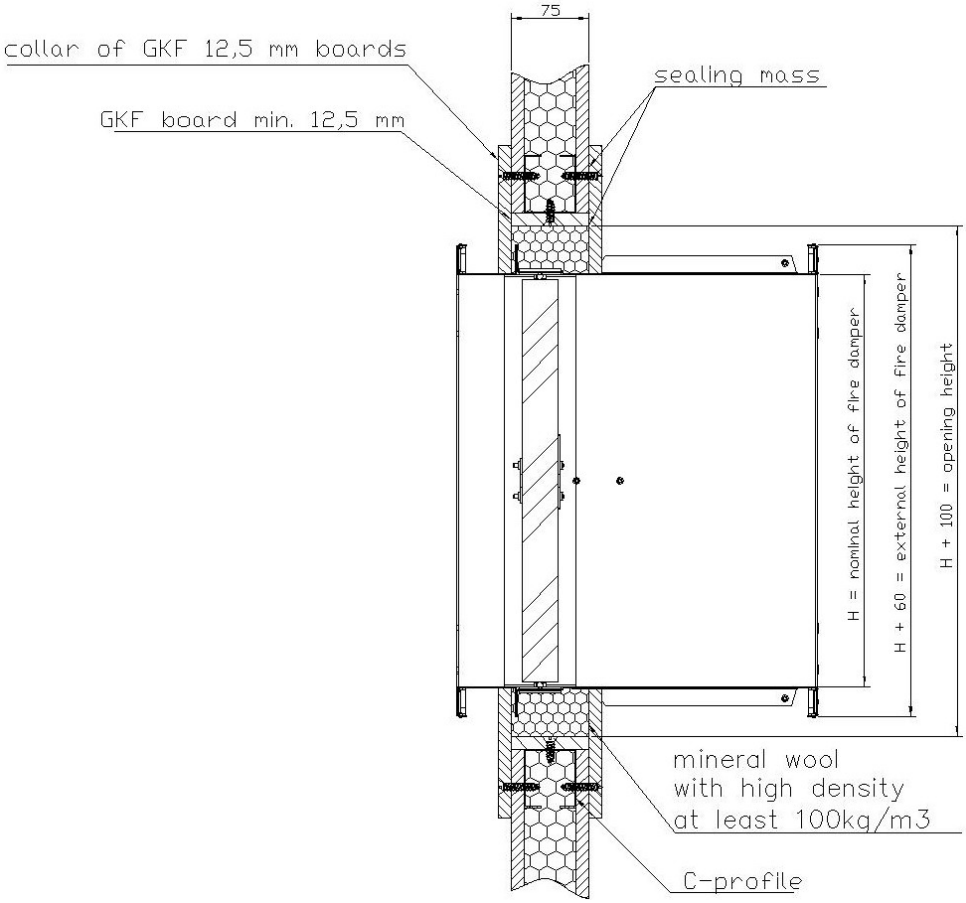

Figure 12. Installation method of fire dampers KWP-L in flexible wall 75 mm thick

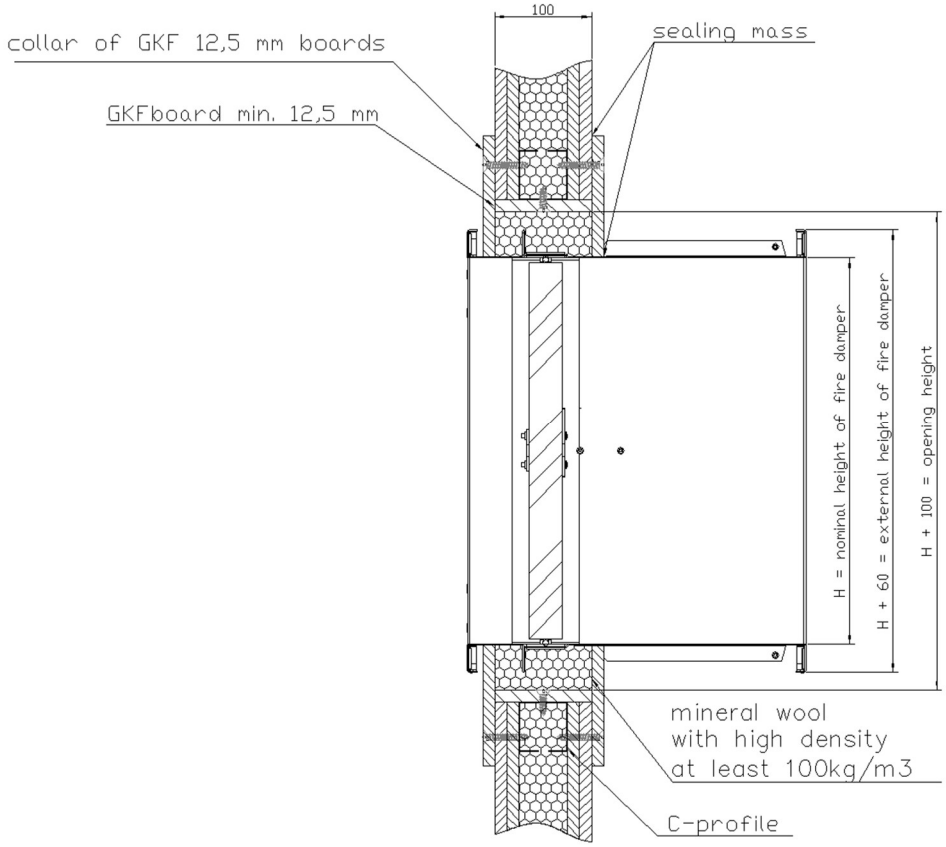

Figure 13. Installation method of fire dampers KWP-L in flexible wall 100 mm thick

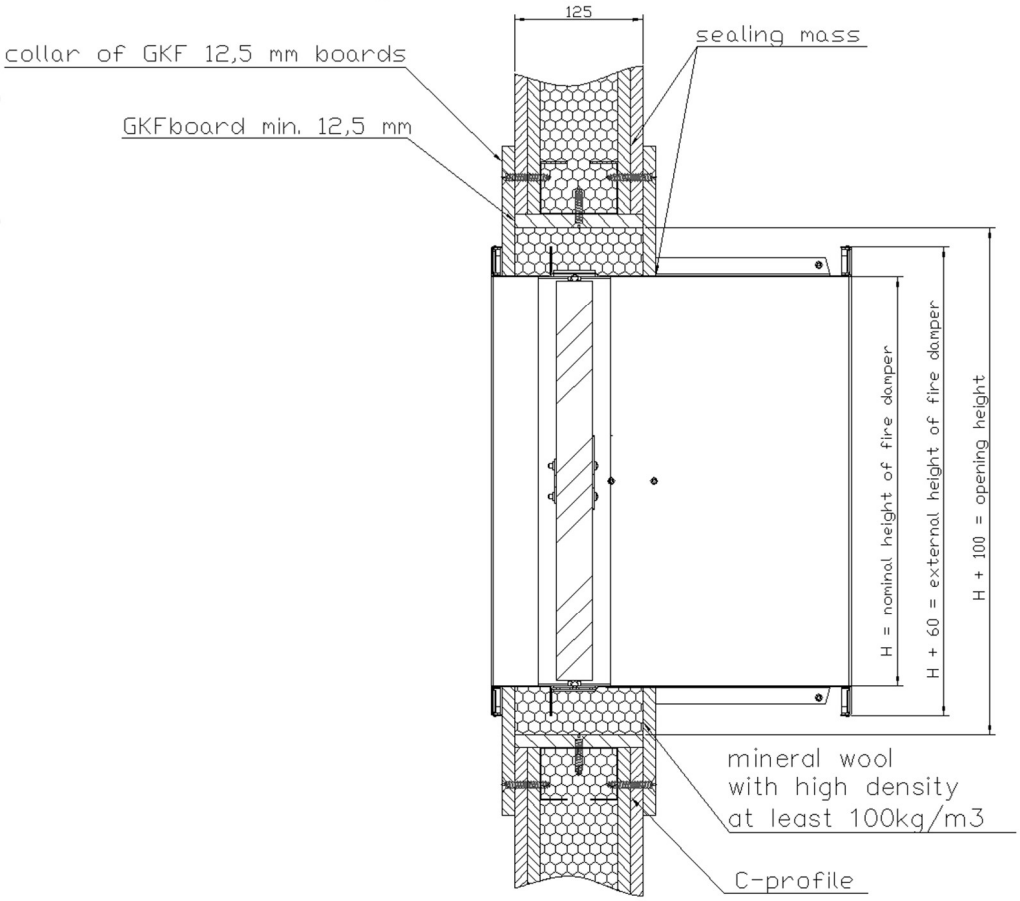

Figure 14. Installation method of fire dampers KWP-L in flexible wall 125 mm thick

7.4. INSTALLATION TECHNOLOGY – CONSTRUCTIONS OF GREAT THICKNESS

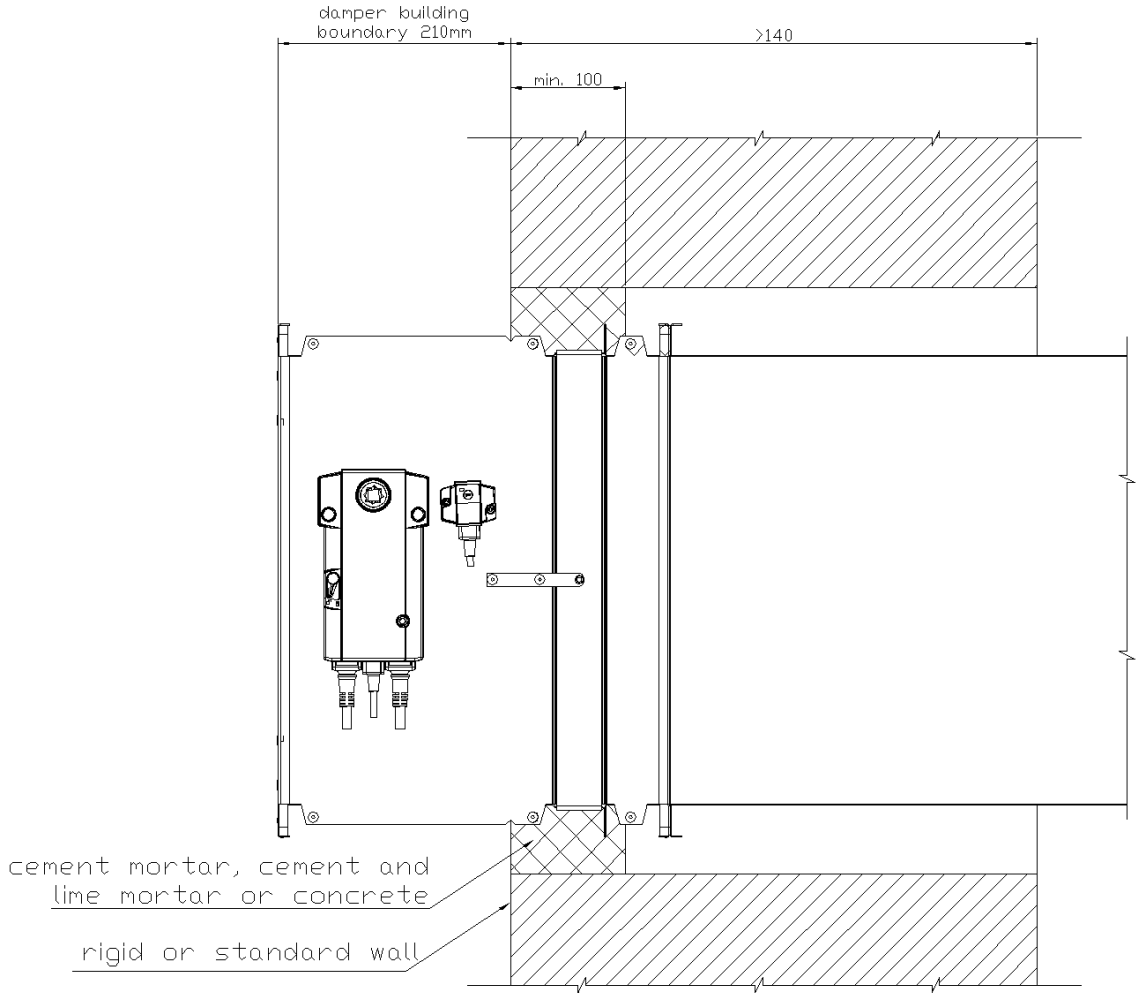

Figure 15. Installation method of fire dampers KWP-L in constructions of great thickness

In rigid and flexible wall construction and in ceiling with thickness less or equal to 140 mm, KWP-L fire dampers are mounted in such a way that the damper baffle axis matches the axis of the structure.
Whereas in case of walls and ceilings with thickness higher than 140 mm: the KWP-L fire dampers are mounted in such a way, that the damper building boundary i.e. 210 mm, is maintained (as in figure 15).

7.5. INSTALLATION TECHNOLOGY – MONTAGE AWAY FROM WALL CONSTRUCTION

a. Make an opening in the wall with the dimensions 100 [mm] (acceptable 80 ÷ 120 [mm]) greater than the nominal dimensions of the fire damper = B+100 i H+100.
b. Push the ventilation duct into the installation opening and seal it with high density mineral wool, 100 kg / m3 or more.
c. Install the closed damper to the duct and support or suspend it so that the damper and duct coaxially is maintained. Install the damper so that its drive is located outside the Promat duct.
d. Coat the mineral wool placed in the installation opening on both sides with PROMASTOP CC layer, approx. 1 mm thick and approx. 100 mm wide.
e. After installing the damper, and establishing its target position at a distance L from the fire barrier, proceed with the montage of the Promat duct according to the drawing and the following guidelines:
   - Make spacing band using PROMATECT-L500 panels with a thickness of 35 mm and dimensions 150x100 mm. For the width B≤300 mm, make two bands, for a width B> 300 mm, make four bands. For an L≥1000 mm distance, make an additional four bands.
   - Make individual sections of the Promat duct made of PROMATECT-L500 panels with a thickness of 50 mm as in the drawing.
   - Suspend the Promat duct along with the spacing strips in the spacing L + 55 using rails and threaded rods. Connect the duct with the wall using PROMAT K84 adhesive.
   - Connect the sides of the duct together using adhesive and 6.0x90 screws, spacing about 200 mm.
   - On the circumference of the damper, in place of the swelling gasket, place strips of mineral wool(density 100 kg / m3 or more) with a profile of 46x30.
   - Make frontal bands of PROMATECT-L500 panels with a thickness of 50 mm and dimensions as shown in the drawing. Connect them to the duct using adhesive and screws.
   - In the place where the duct connects to the frontal band, make a sleeve joint band made of PROMATECT-H board, 20 mm thick and 100 mm wide. Remaining dimensions should be selected according to the drawing. Connect the band to the duct using adhesive and 4.5x50 screws.
   - Place the sealing band made of PROMATECT-L500 panels with a thickness of 50 mm and dimensions according to the figure at the connection of the Promat duct with the fire barrier.
   - Connect the band with the duct using adhesive and screws 6.0x90. The band must be connected the wall using the M8 anchors in a spacing of approx. 200 mm

ATTENTION: In case of lack of information regarding the damper installation, the assembly of the duct made of PROMAT boards should be carried out in accordance with the PROMADUCT-500 System, accordance with the National Technical Assessment No. ITB KOT 2021/1823 and PROMAT guidelines. The maximum distance from the building partition is 1000 mm.

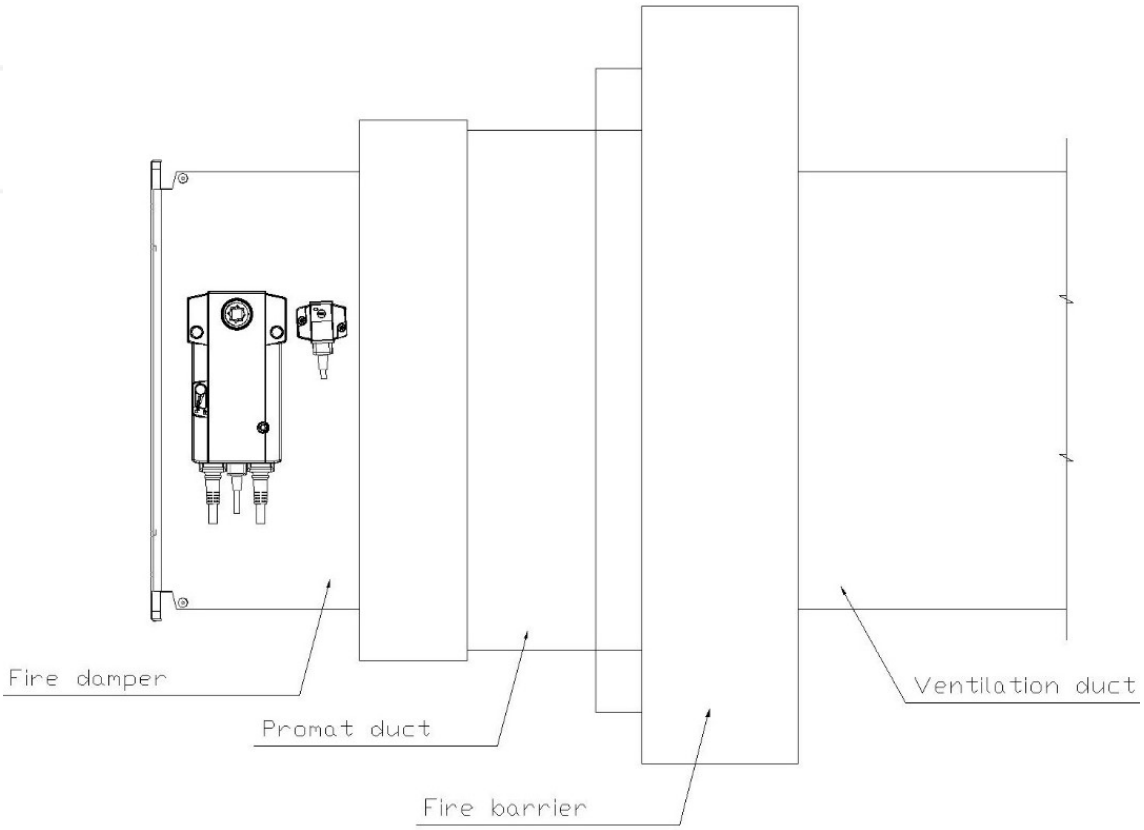

Figure 1. Installation of fire dampers KWP-L away from wall construction according to point 2

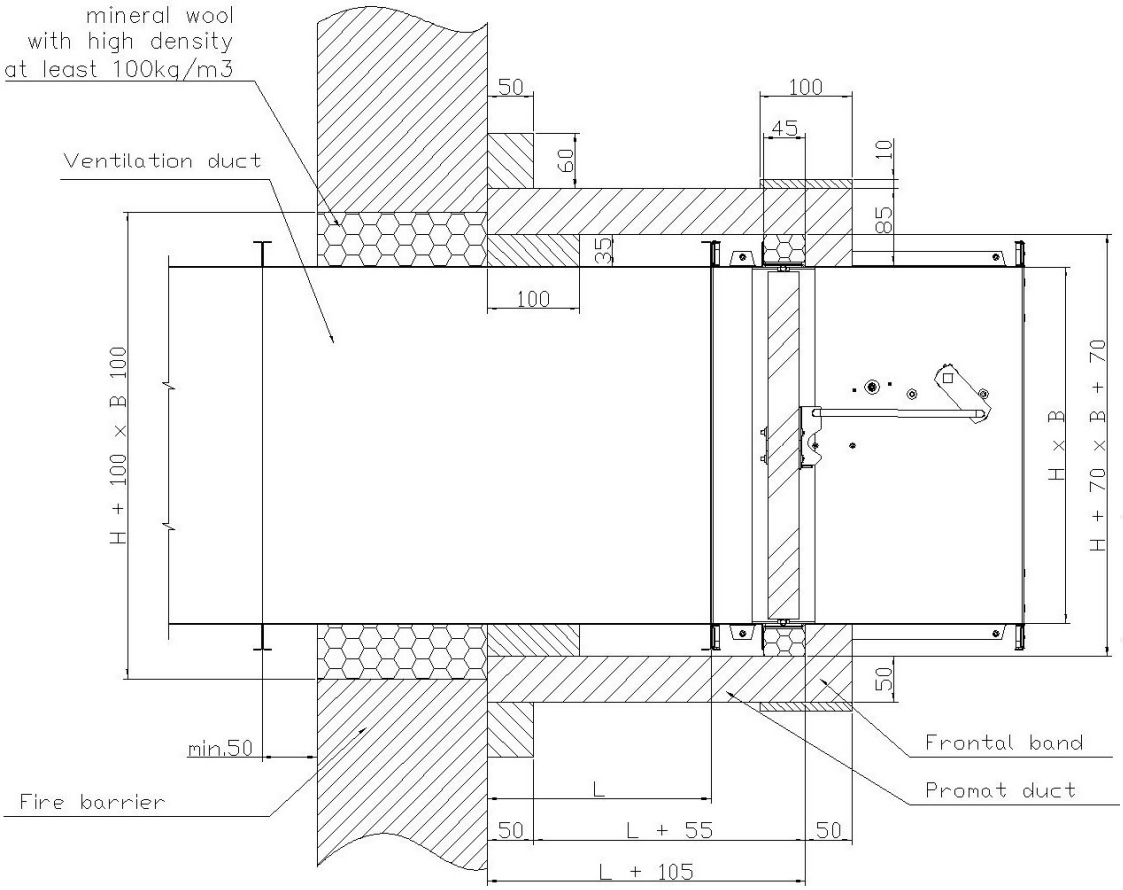

Figure 2. Installation of fire dampers KWP-L away from wall construction

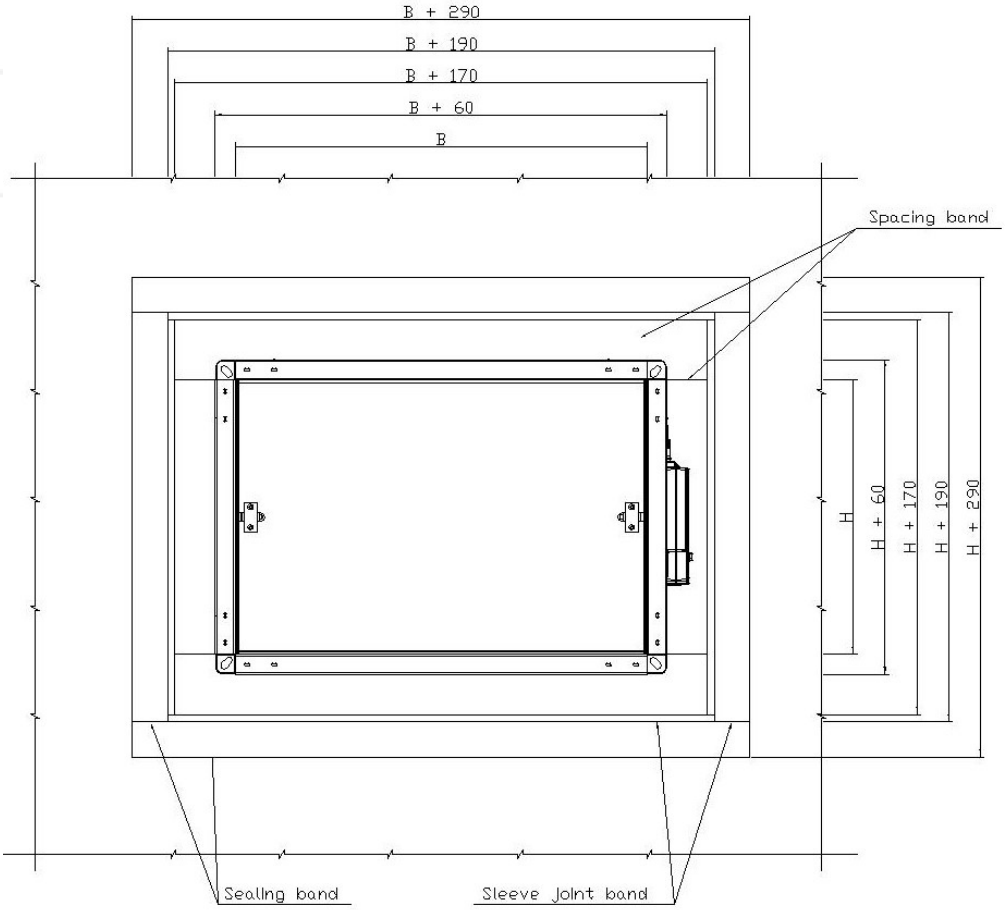

Figure 3.Installation of fire dampers KWP-L away from wall construction

8. PRINCIPLES OF MAINTENANCE

Before started any operation and maintenance works it is recommended to read this documentation. This responsibility falls mostly on workers which will operate device/system during operation and service works. In case of lack of trained personnel (with specific technical skills) service works should be made by SMAY Service or SMAY Authorized service.
Damage to the KWP-L damper resulting from non-compliance with the guidelines included in this documentation, will not be subject to warranty repairs.
Exchange and modification of device components can be done, just by SMAY Service or SMAY Authorized service (does not apply to exchange thermal fuse).
Factory sealed elements, should have undamaged, original seals, installed by SMAY Service or SMAY Authorized service.
After installation of the KWP-L fire damper, when running the system, it is recommended to carry out regular checks and record them as shown in table below. It is recommended to repeat checks at intervals or at least once every 6 months.

Table 5. Recommended checks

Fire damper type	
Control date	
Check actuator wiring condition, if doesn`t damaged	
Check limit switch wiring condition, if doesn`t damaged	
Check cleanliness in fire damper, clean if necessary	
Check baffle and seal condition, if necessary report a problem	
Confirm correct operation of safe shutdown of the fire damper, if necessary report a problem	
Confirm correct operation of the fire damper when OPEN and CLOSE, using the control system and physical observation	
Confirm correct operation of limit switches in OPEN and CLOSED positions, if necessary report a problem	
Confirm that the fire damper meets its function as a part of the control system	
Confirm that the fire damper remains its working position	
ATTENTION: Fire dampers are usually part of ventilation system. In this case, the entire system should be checked according to the operating and maintenance requirements.	

In order to check the proper functioning of fire damper, in particular:

KWP-LE fire damper

a. Make a visual inspection of the interior of fire damper, determine the condition of the baffle and seal, whether there are no damage or dirt that could block the fire baffle during closing.
b. Check the fire damper without disconnecting the supply voltage from the actuator.
c. The opening and closing test should be carried out by positioning the baffle from control system („open" and „closed" position read on the position indicator located on the actuator).
d. After doing the above, leave the fire damper in the open position.
e. Make a control protocol.

KWP-LS fire damper

a. Make a visual inspection of the interior of fire damper, determine the condition of the baffle and seal, whether there are no damage or dirt that could block the fire baffle during closing.
b. Check the wiring of the limit switches.
c. Close the fire damper by pulling on the hand release. The baffle should close freely. Check that the baffle is closed properly. If the baffle does not close properly, adjust by pulling the spring to the next latch of the spring mechanism.
d. After that, move several times the baffle using a key, attaching it to the axle
e. After doing the above, leave the fire damper in the open position
f. Make a control protocol.

On the housing of fire damper there is an inspection opening, which enables making an inspection and checking the condition of the drive system. inspection opening is sealed by ceramic gasket and it is installed by M5x16 screw.

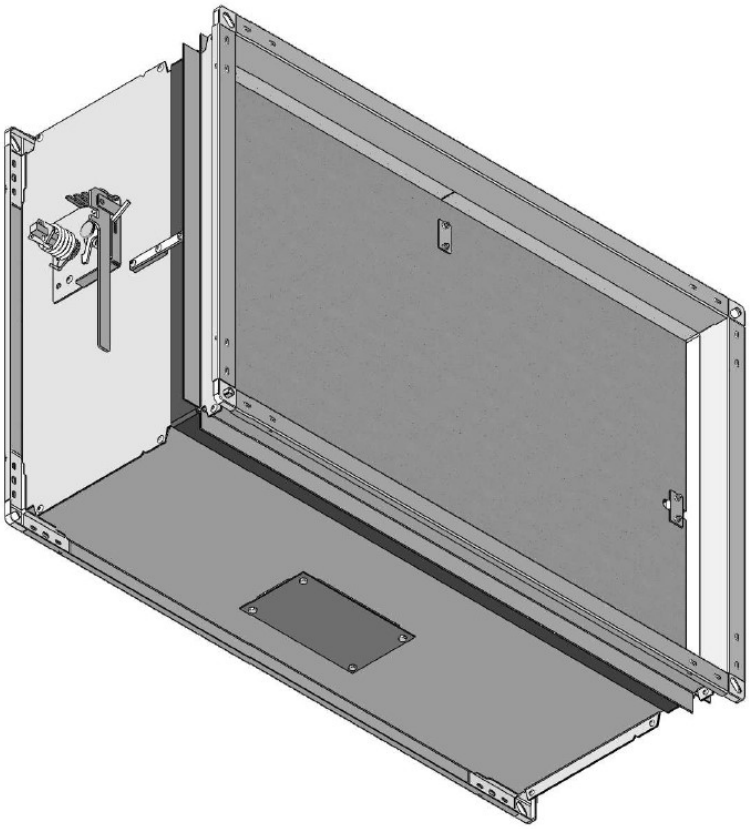

Figure 4. Inspection opening in KWP-L damper

Fire damper can be cleaned with a dry or damp cloth. Dirt and other pollution can be cleaned with generally available cleaners. Do not use aggressive, caustic cleaners and sharp tools.

Replacing the thermal fuse element in KWP-LS

Exchange must be performer on the closed position.
To replace the thermal fuse element:

a. Release the spring **7** from the spring mechanism plate **1**.
b. Unscrew the bolt **14** and pull out the entire thermal fuse element. The assembly of these elements consists of a thermal fuse element **16**, hook **6**, console **5**, washer **7**, release spring **9**, nut M8 **12**, round nut **8**, thermal fuse plate **13**. To replace the thermal fuse, press the hook **6** towards to the nut and put into console. When you put the thermal fuse, release the hook and push the lever of hand mechanism.
c. Install the assembly of thermal fuse with the bolt **14.**
d. Pull the spring onto spring mechanism plate **1.**
e. Open the fire damper and check that it opens and closes correctly after push the hand release lever **11**.

Closed position

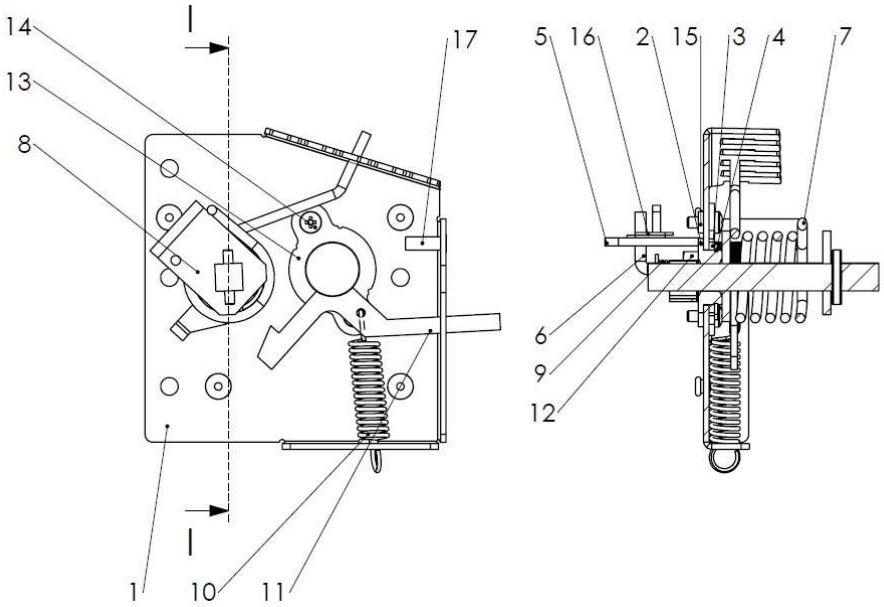

Figure 5. Spring mechanism – replacement of the thermal fuse element

Table 6. Diagnostic card

Diagnostic card			
No.	**Symptoms of malfunction**	**Causes of malfunction**	**How to remove malfunction**
1	No signaling opening/closing fire damper	1. Failure to fully open the baffle (wrong connected ventilation duct) 2. Improperly connected wires of limit switch 3. Damaged actuator	1. Removing the cause of blocking baffle 2. Correct wiring 3 . Replacing the actuator with a new one (after consulting with fire damper`s manufacturer)
2	No actuator response after connecting power	1 .Damaged actuator 2. Damaged temperature sensor 3. Locked baffle	1. Replacing the actuator with a new one (after consulting with fire damper`s manufacturer) 2. Replacing the temperature sensor to a new one 3 .Removing the cause of blocking baffle
3	No possibility of opening the fire damper with actuator by key	1 .Broken mechanism in the actuator (too rapid rotation) 2.Locked baffle	1. Replacing the actuator with a new one (after consulting with fire damper`s manufacturer) 2. Removing the cause of blocking baffle

9. TERMS OF WARRANTY

f. The manufacturer provides guarantee for the delivered product for a period of 24 moths from the date of sale or another period agreed in the contract. There is a possibility of extending the guarantee, provided that a separate Maintenance and Service Agreement is signed between the manufacturer and the owner/manager of the facility.

g. The basis for complaint handling is to file a complaint within the warranty period, within 7 days of the detect being discovered. Make the product available in the state in which it appeared to be defective, together with a detailed description of the technical problem and documents confirming the performance of any inspection provided by the manufacturer and periodic maintenance.

h. The manufacturer undertakes to remove the defect within 2 working days of receiving the notification. The manufacturer undertakes to remove the defect within 21 working days from the date of receipt of the application together with the complete set of documents, and in the case of necessity to bring in hard-to-reach materials or parts, the repair will be carried out within the shortest technically reasonable time.

i. The warranty period is extended by the duration of the repair.

j. The warranty is valid in the cases described in the OWG.

k. OWG & OWS documents are available on the website www.smay.pl

l. Above terms of warranty apply only in Poland.